Gen-Sets for Hybrid-Powered Transformative Flight

Transformative Vertical Flight Workshop
NASA Ames 2015

Mike Ricci
Vice President, Engineering
mricci@launchpnt.com

LaunchPoint Technologies

"Propulsion By Wire" Technologies

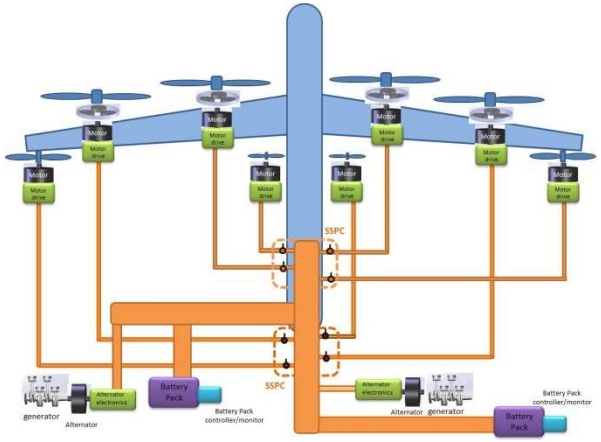

Hybrid Vehicle Micro-Grid

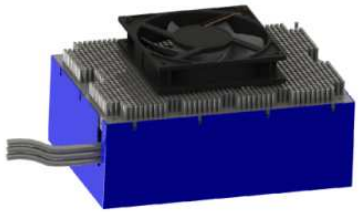

High power density, high efficiency electric motors/generators/power electronics

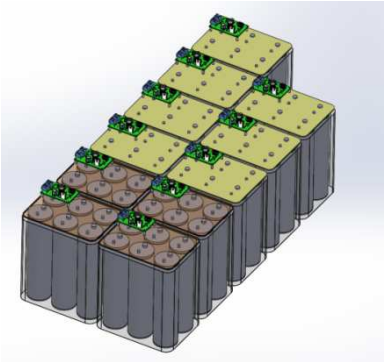

High-Rel BMS

Gen-Sets for aircraft hybrid power

LAUNCHPOINT TECHNOLOGIES

Electric Propulsion

- Enables new design flexibility

- Electric energy storage is a weight problem
  - At least in the near term…

Specific Energy

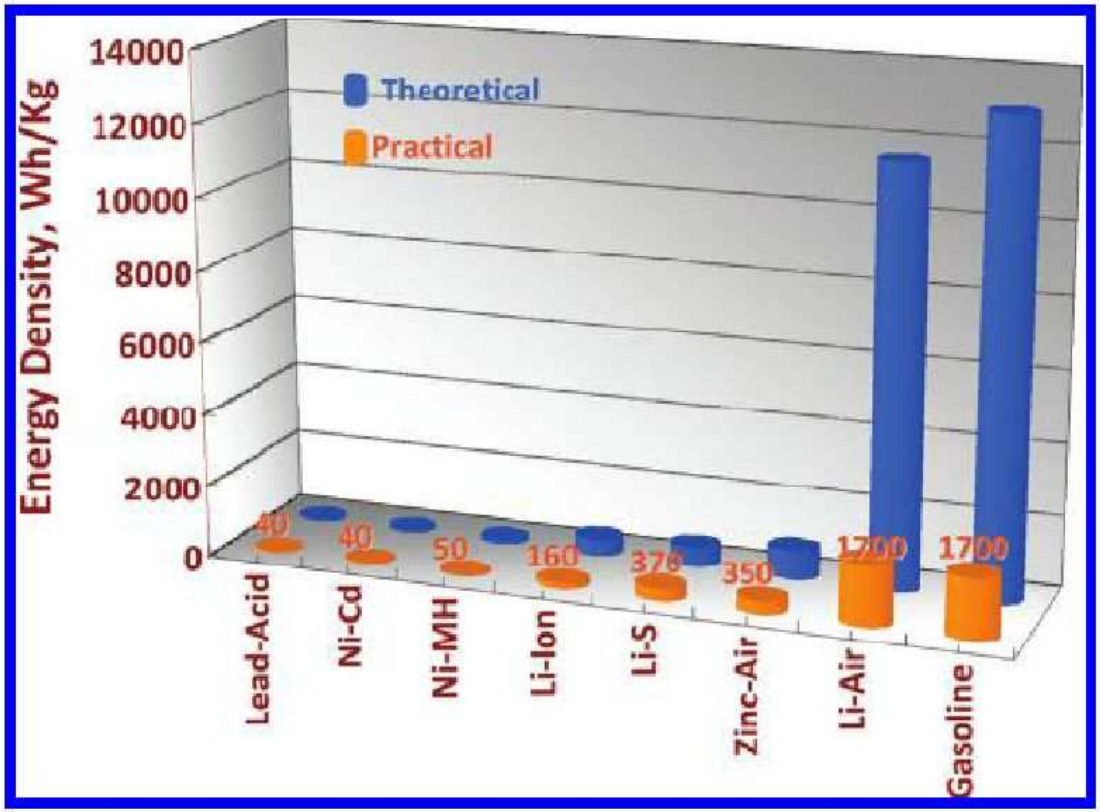

$(\text{Engine SFC}/\eta)^{-1}$ = 1480 to 3788 W*hr / kg

Li-Ion batteries = 125 to 175 W*hr/kg

http://www.intechopen.com/books/new-generation-of-electric-vehicles/the-contribution-and-prospects-of-the-technical-development-on-implementation-of-electric-and-hybrid

Specific Power -Conversion mass

- Gen-set – fuel to electricity conversion
  - NASA GSE gen-set - 1000 W/kg
  - 1.5 kW gen-set - 830 W/kg
  - 45 kW Rotax gen-set - 870 W/kg

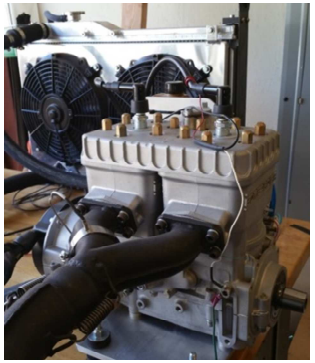

- Battery has no fuel conversion mass, but does have power density
  - Hobby pack
    - 1400 W/kg (High C rate discharge)
  - Tesla car
    - ~1000 W/kg peak discharge

What's best?

- Mission duration dependent
- Short missions favor high power density over efficiency and energy density
- Long missions favor efficiency and energy density over power density
- Hard to compare batteries since they are storage and conversion in one device…
- Need to look at system versus mission duration

When Does Hy

Flat height set by energy conversion power density

Specific Power vs Duration (Energy Storage Included)

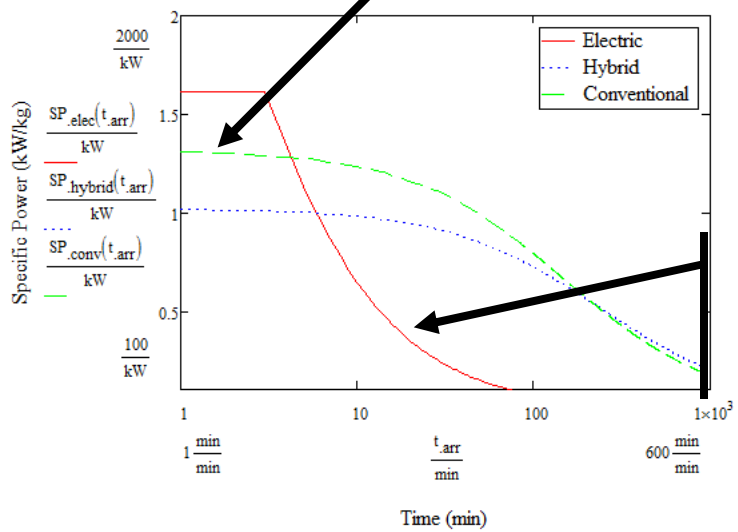

B. Georgi, et al., SAE972686 (1997)

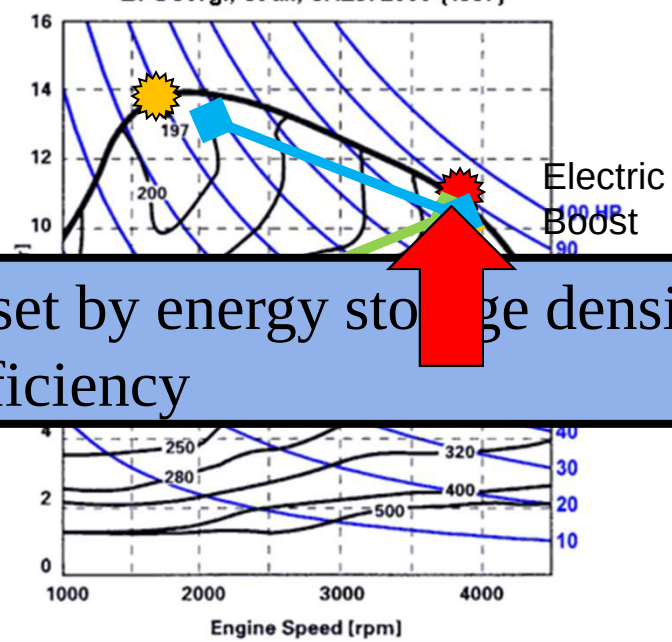

Electric Boost

Slope set by energy storage density and efficiency

Assumptions

Conventional System	
Engine Specific Power	.8hp/lb
Bsfc*	.5lb/(hp*hr)

* Assuming fixed pitch propeller or constant speed rotor and peak power requirements ~2X cruise power

Full Electric	
Battery Specific Energy	125W*hr/kg
Max Battery Capacity	20C

Hybrid Electric	
Motors Specific Power	7kW/kg
Electronics Specific Power	13kW/kg
Engine Specific Power	.8hp/lb
bsfc	.4lb/hp*hr

Max Engine Power

Best Fuel Consumption

Automobile or VTOL

Helicopter/Fixed wing

Series Hybrid Helicopter

LAUNCHPOINT TECHNOLOGIES

Hybrid Power System

- Engine
- Fuel tank
- Controller
- Starter/alternator
- Power electronics
- Reserve/starting battery pack
- BMS

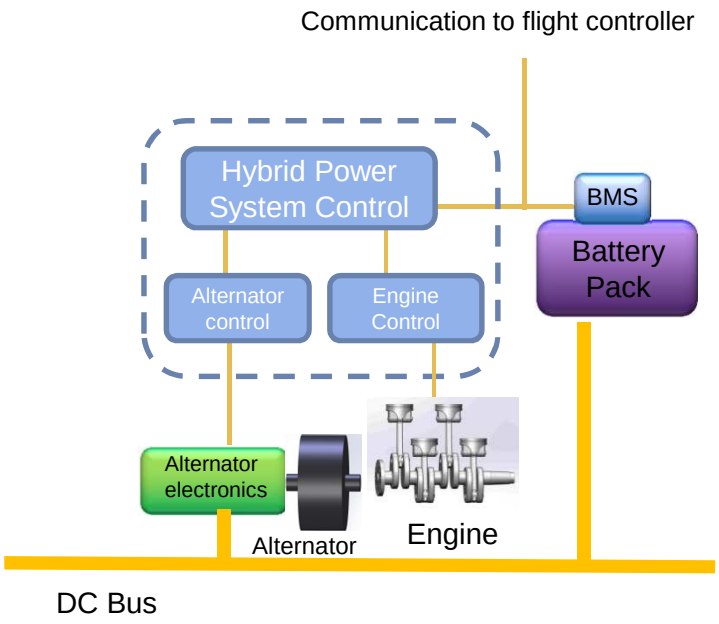

Hybrid Aircraft Gen Sets

- High Power Density Engine
- Efficient, light-weight electrical machine (>90%)
  - (Typical automotive type <60% efficient)
- Power electronics/controls

1.5 kW

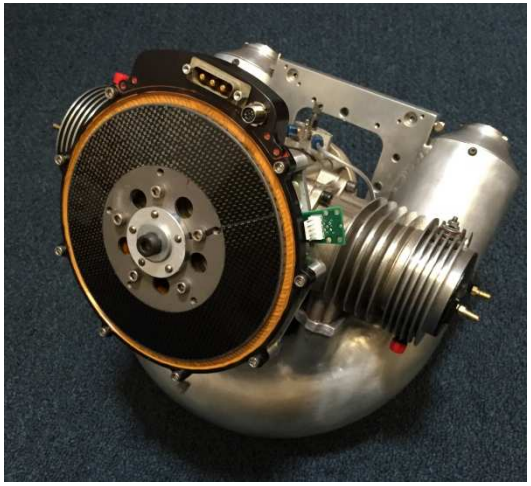

6 kW

40 kW

LaunchPoint Dual Halbach Array Machine

High power density and efficiency – 2.5 to 5 hp/lb at 95% efficient depending on speed, size, and configuration

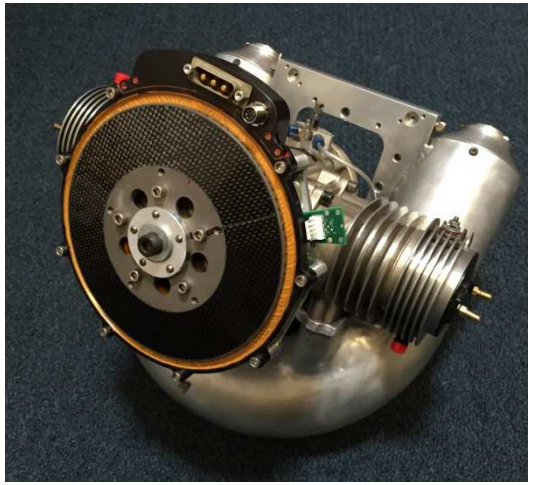

Patent Pending

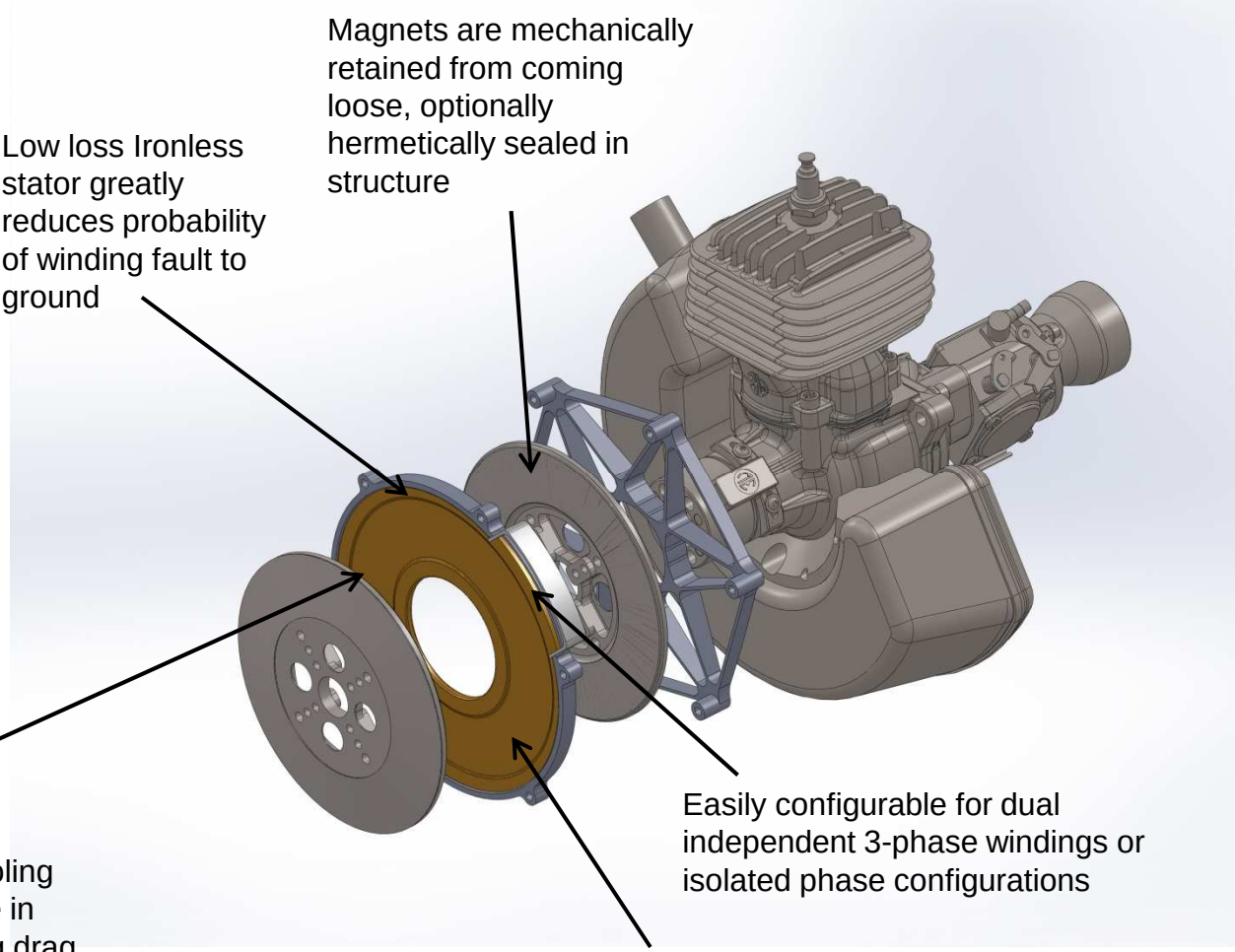

Low loss Ironless stator greatly reduces probability of winding fault to ground

Magnets are mechanically retained from coming loose, optionally hermetically sealed in structure

Centrifugal pumping provides stator cooling air flow without need for alternator to be in free air stream, reducing vehicle cooling drag

Easily configurable for dual independent 3-phase windings or isolated phase configurations

Fully encapsulated winding with heavy duty, high temperature phase insulation

LAUNCHPOINT TECHNOLOGIES

Halbach arrays are a key enabler

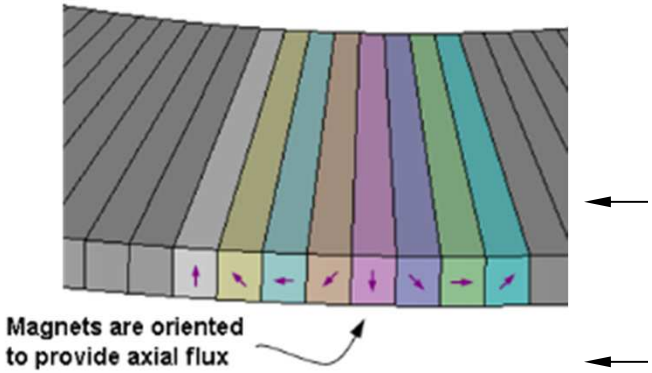

The field is concentrated on this side

The field is cancelled on this side

No heavy iron/steel required to focus flux into air gap of motor

Single Halbach Array

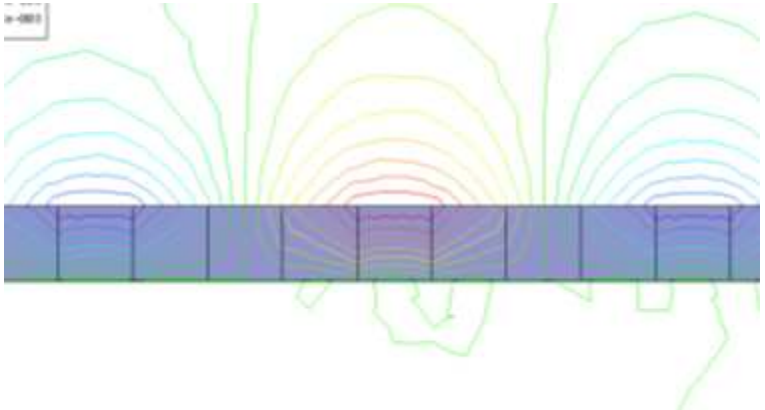

Dual Halbach Array

Ironless stator winding is placed into gap between two moving arrays where field is concentrated

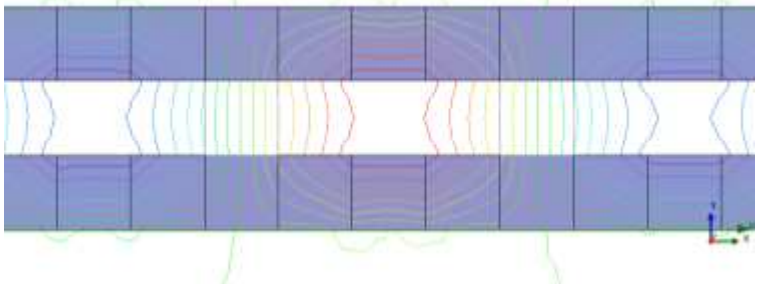

Reduced Cooling Drag

- Spinning disks with small gap create turbulent, highly convective layer in contact with stator for cooling
- Centrifugal action pumps fresh air through the gap to ensure cooling even without high speed flow over motor

Air velocity in gap between stator and magnets- from CFD analysis

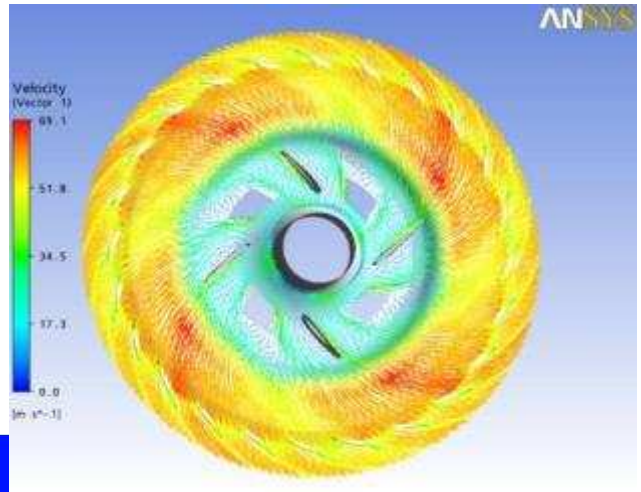

Ram air and high velocity stream not required for cooling motor, low drag NACA inlet for cooling is sufficient

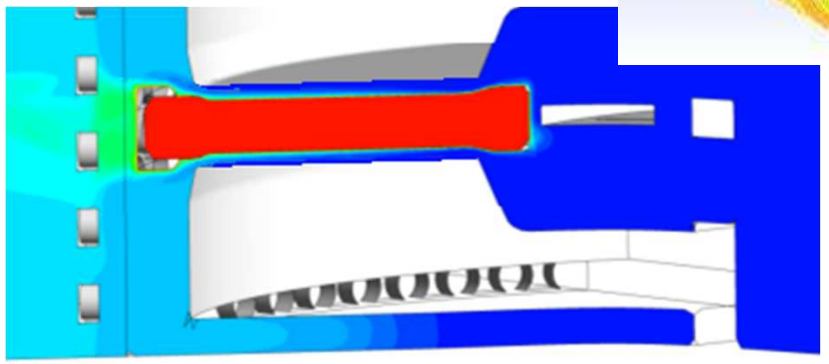

CFD analysis of Motor section showing temperature in air

1.5 kW Gen-Set

- Power source for 22 lb (11 kg) multirotor or 55 lb fixed wing
- In-flight shutdown/restart of engine, battery recharging
- SFC ~ .62 kg/kW*hr (1 lb/hp*hr)~1.8 kg mass

DJI s1000

- 15-20 minutes battery electric
- Estimated 60 minutes hybrid-electric with 5 minute battery-electric reserve
  - Approx. 25% payload, 33% power system

NASA GL-10

- 35 minutes battery electric (7.3 lb cruise battery)
- Estimated 80 minutes hybrid-electric with 7.3 lb gen-set/fuel and 2 minute hover battery-electric reserve
- Estimated 3 hour endurance with 10 lb gen-set/fuel

Heavy fuel 6 kW Gen-Set

2 stroke, 2 cylinder heavy fuel engine by GSE
Mated to LaunchPoint alternator

1 kW/kg for fuel to DC bus conversion

Subcontract to LaunchPoint Technologies Funded under a NASA contract with NIA

LAUNCHPOINT™ TECHNOLOGIES

GSE-LaunchPoint Gen-Set

- 6 kW max continuous power
- <6 kg (13lb) for 6 kW (8 hp) gen set
  - 8 lb engine
  - 3 lb alternator
  - 2 lb electronics
- ~.25 kg/kW*hr SFC
  - (.4 lb/hp*hr)

- 95% efficient shaft – DC bus conversion at 1.5 kW
- 90% efficient shaft – DC bus conversion at 6 kW

LAUNCHPOINT TECHNOLOGIES

45 kW Gen-Set

- Rotax 582 powerplant
  - Engine, alternator, electronics = 51.5 kg
    - Alternator ~7 kg
    - Power electronics ~3 kg
    - SFC = .41 kg/kW*hr

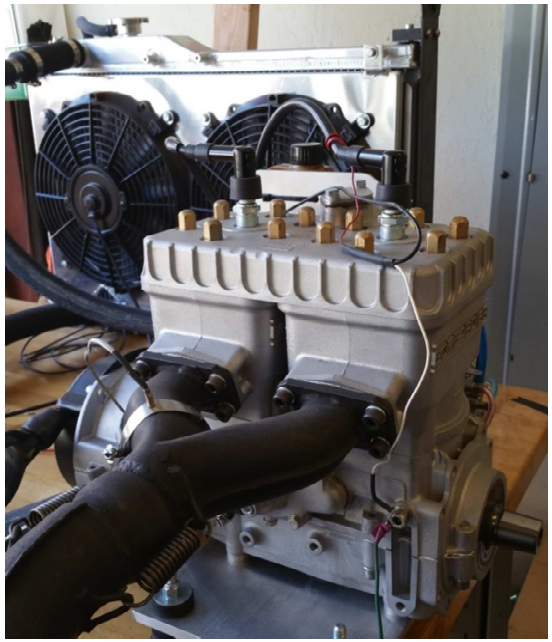

Power Electronics

- Electric Machines & Electronics
  - Power Electronics – prototype 40 kW drive in development

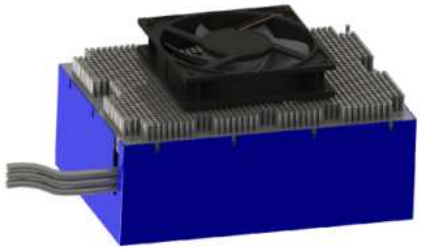

    10 – 20 kW/kg – depending on thermal
  - 1.5 kW and 6 kW units in development
  - Aviation specific software and features
    Customizable fault behavior
    Precise rotor control

Electric Machines

7.5” Gen-Set Alternator

- 10 kW at 7500 rpm
- 16 kW at 12,000 rpm (this fall)
- 1.5 kg mass
- 6.6 kW/kg @ 7500 rpm
- 10 kW/kg @ 12,000 rpm

- In-runner design
- Tip speed 75 m/s @ 7500 rpm; 120 m/s @ 12000 rpm
- Titanium plates, hermetically sealed, mechanically retained magnets
- Large structural margins to accommodate engine power stroke pulsation

13” Generator

- 82kW at 6200 rpm, 95% efficiency
- 12.7 kg
- 6.5 kW/kg

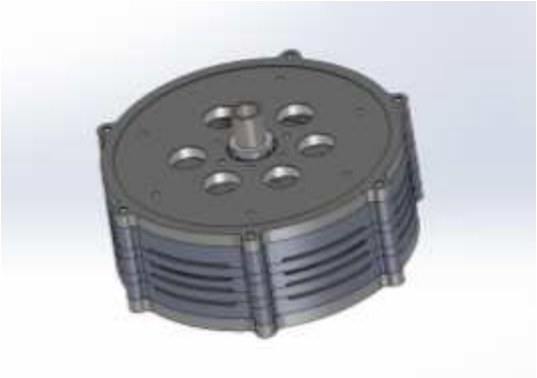

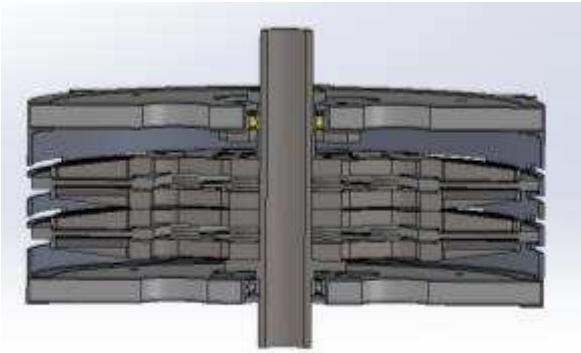

- Tip speed 98 m/s
- In-runner design
- Titanium rotor plates
- Expect 20% weight savings with CF

Stacked Motor (proposed)

- Gears are now an option for greatly increased specific power
- 7.5” diameter
- 32 kW, 2500 rpm
- 4.8 kg
- 6.7 kW/kg

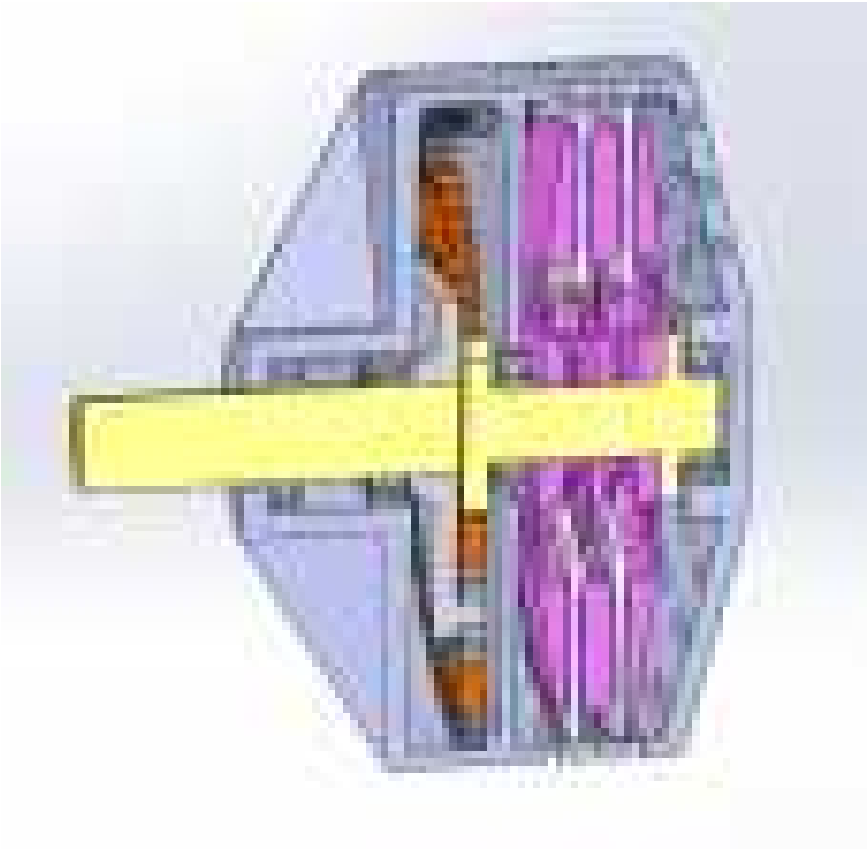

7.5” 96 kW with gear reduction (proposed)

- 12,000 rpm motor, 2500 rpm output shaft
- 11 kg
- ~9 kW/kg

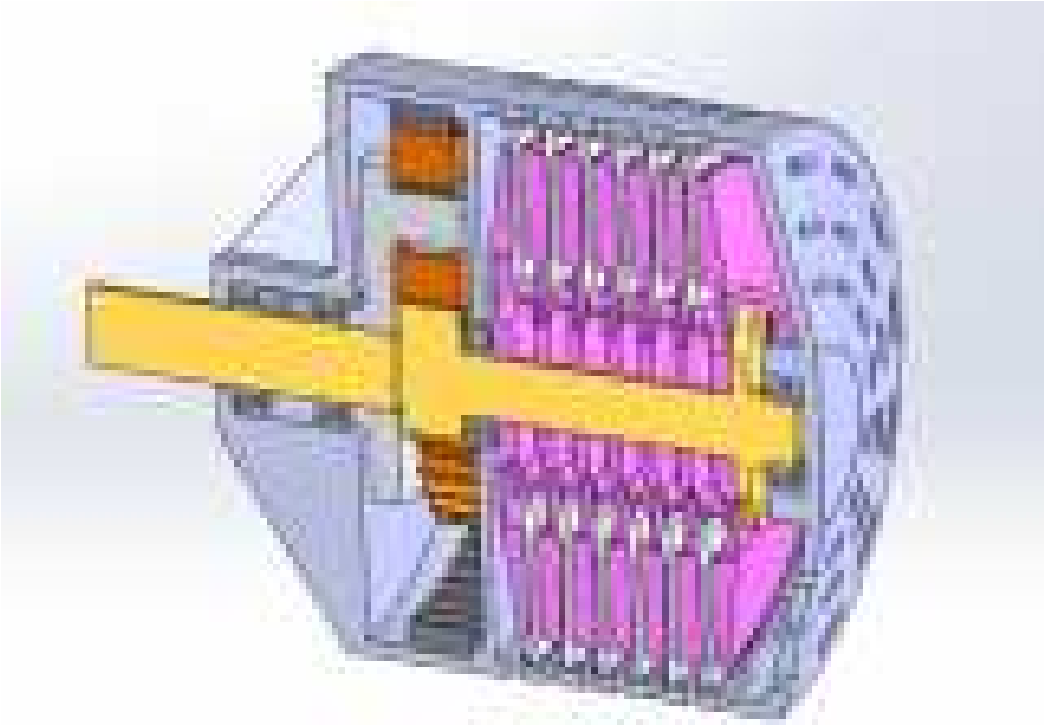

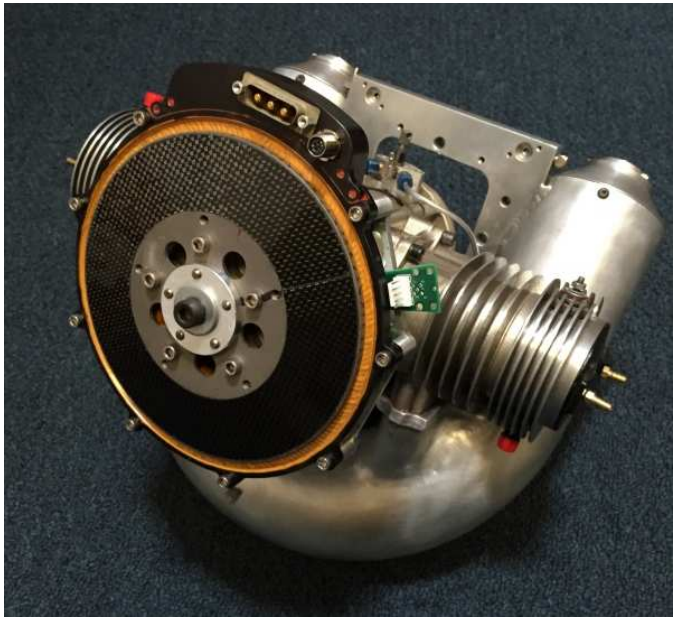

Mike Ricci

Vice President, Engineering

mricci@launchpnt.com

(805) 683-9659 x244

•Partial funding from DARPA Phase I SBIR contract #W31P4Q-09-C-0109

•Partial funding from NASA Phase I SBIR contract #NNX10CD84P

LAUNCHPOINT TECHNOLOGIES