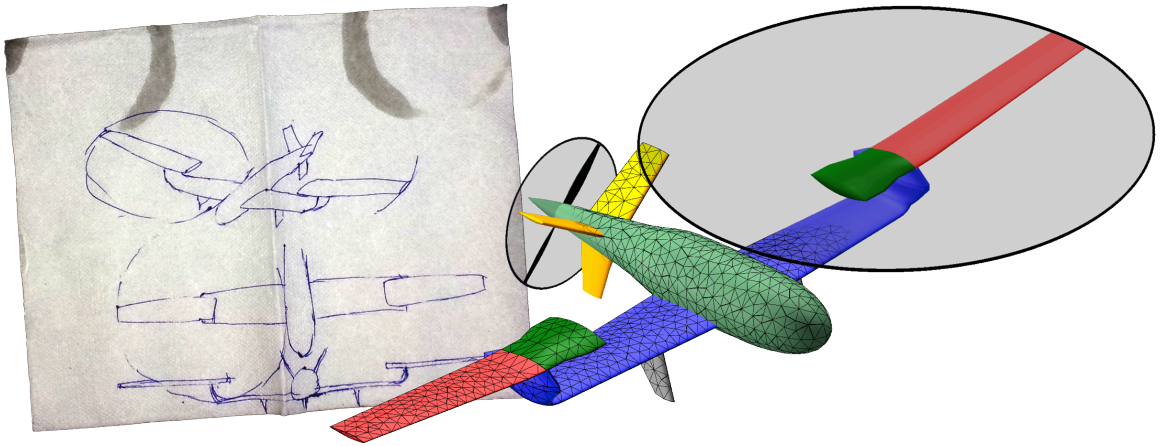

Fit Model

Interactive Reconstruction of 3D Models in OpenVSP

Rob McDonald

VSP To CAD Interoperability

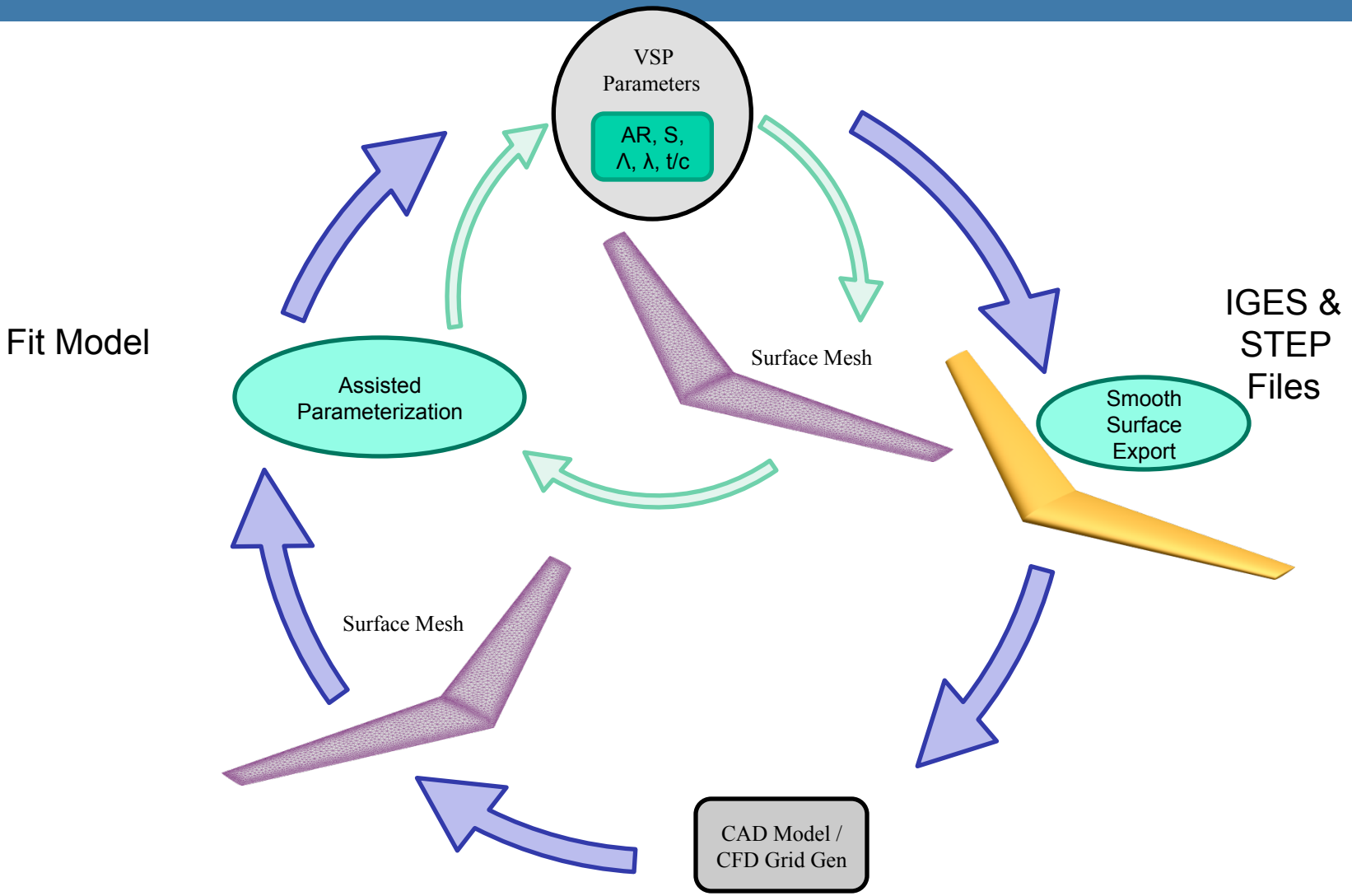

Fit Model Use Case

- Reverse engineer physical object
  - Laser scan
    - Aircraft, Part, Tunnel model, etc.
- Interoperate with legacy model
  - CAD model
  - Surface mesh
- Aircraft Derivative or Modification
  - Re-winging existing aircraft
  - Stretch fuselage
  - Adapt to alternative mission
- Baseline for design study
  - Match model
  - V & V of analysis or design process
  - Gain parameterization
- Do not want a ‘dumb’ fit
  - OpenVSP Parameters
  - Match ‘native’ model in creation

Nomenclature

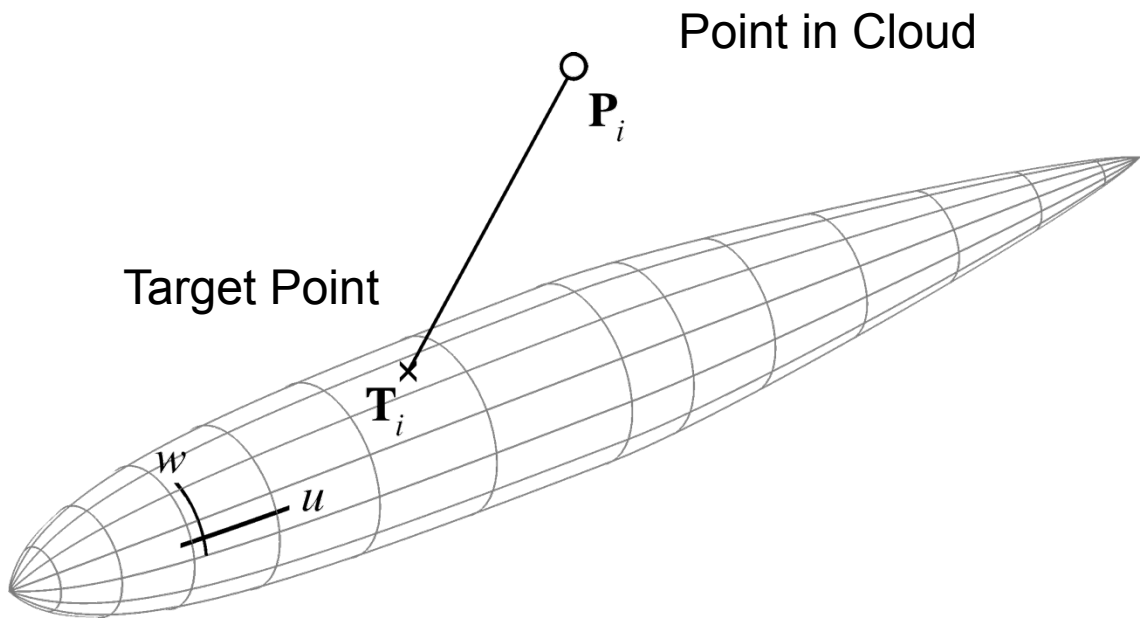

Surface
Parametric
Coordinates

Least Squares Formulation

$$\min\left(F\left(\bar{x}\right)\right)$$

$$F\left(\bar{x}\right)=\sum_{l=1}^{m}\sum_{k=1}^{3}\left(P_{l,k}-T_{l,k}\left(\bar{x}\right)\right)^{2}$$

$$\bar{x}=\left\{\bar{V},\bar{u}_{free},\bar{w}_{free}\right\}$$

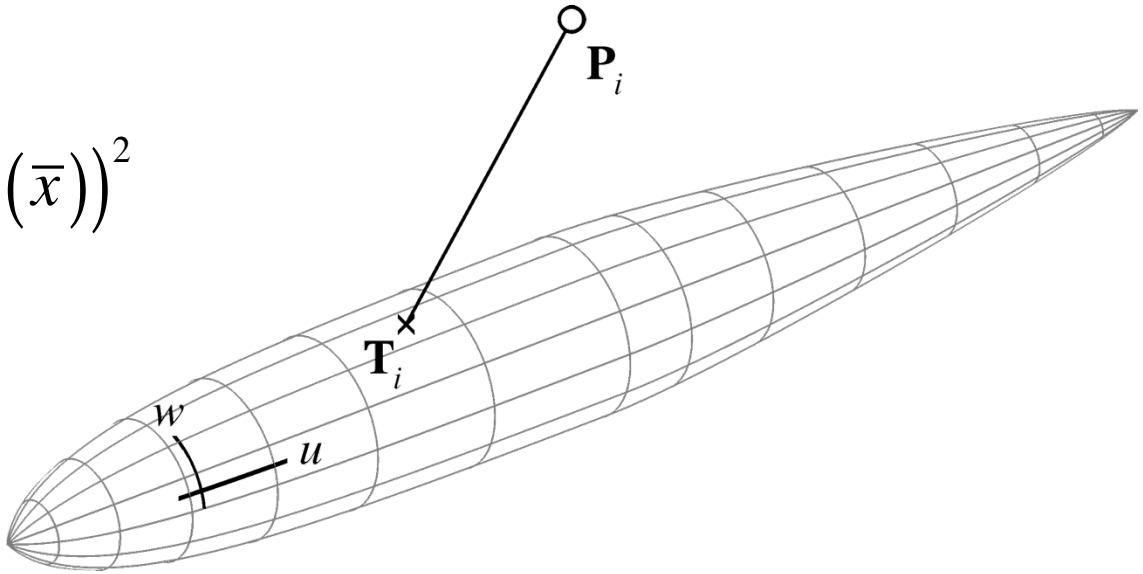

C/C++ Minpack Form

$$F(\bar{x}) = \sum_{i=1}^{3*m} \left(f_i(\bar{x}) \right)^2$$

$$f_i(\bar{x}) = P_i - T_i(\bar{x})$$

$$\left. \frac{\partial f_i}{\partial x_j} \right|_{\bar{x}}$$

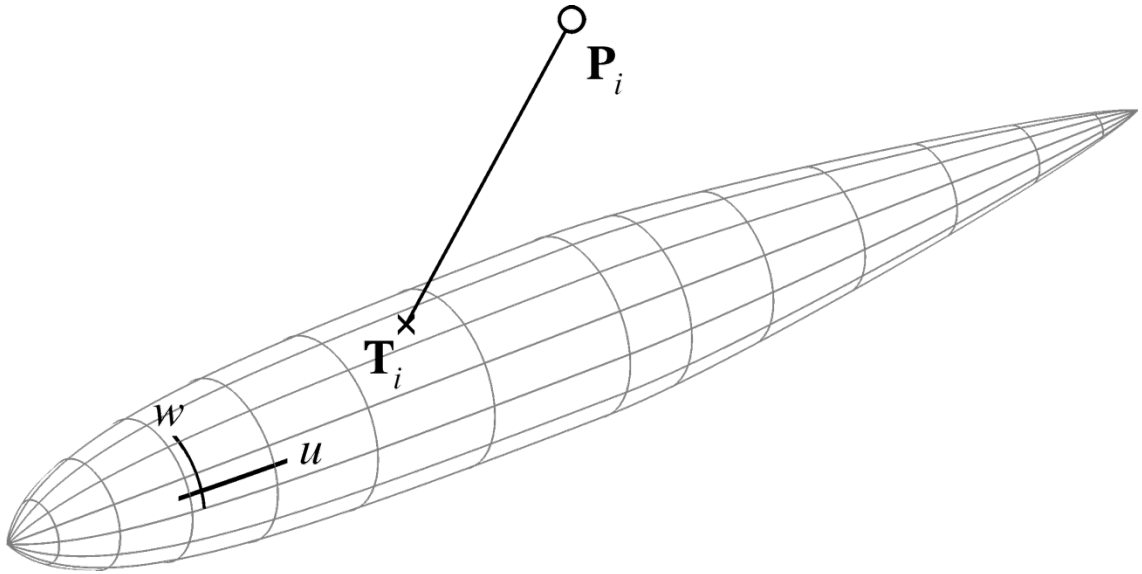

Recall: $\bar{x} = \left\{ \bar{V}, \bar{u}_{free}, \bar{w}_{free} \right\}$

The Optimization Problem

- The user must:
  - Identify cloud point / target point pairing
  - Identify each target u, w as fixed or free
  - Specify values for any u, w fixed
  - Identify parameters V
  - Control the optimizer

Recall:

$$\min\left(F\left(\bar{x}\right)\right)$$

$$F\left(\bar{x}\right) = \sum_{l=1}^{m}\sum_{k=1}^{3}\left(P_{l,k} - T_{l,k}\left(\bar{x}\right)\right)^2$$

$$\bar{x} = \left\{\bar{V}, \bar{u}_{free}, \bar{w}_{free}\right\}$$

Fit Model GUI designed around helping the user pose the optimization problem.

Fit Model GUI

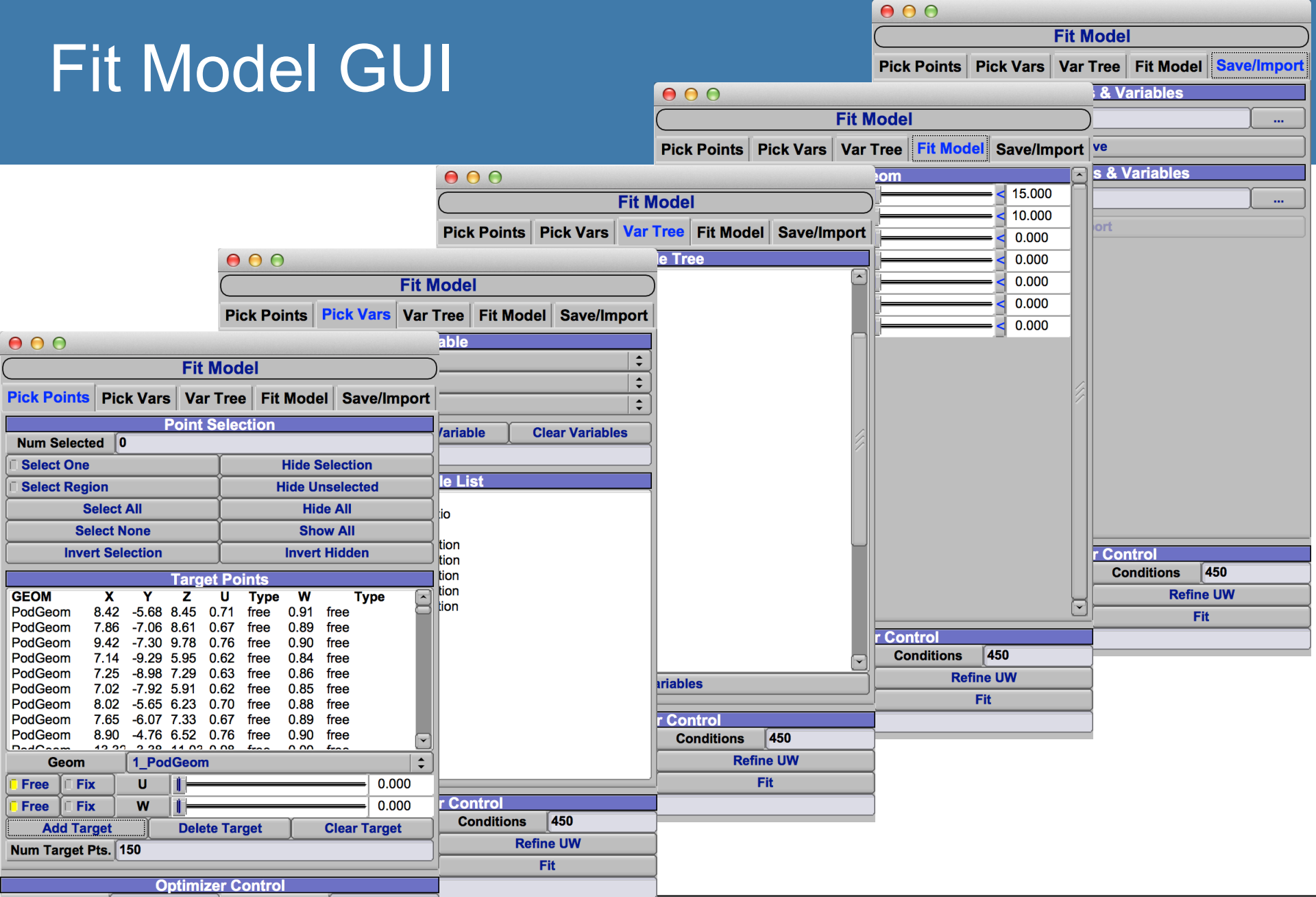

Pick Points

- Identify cloud point / target point pairing
- Identify each target u, w as fixed or free
- Specify values for any u, w fixed

Point Selection

Target Point List

Target Component

Target Mode Control

Add/Delete Target Points

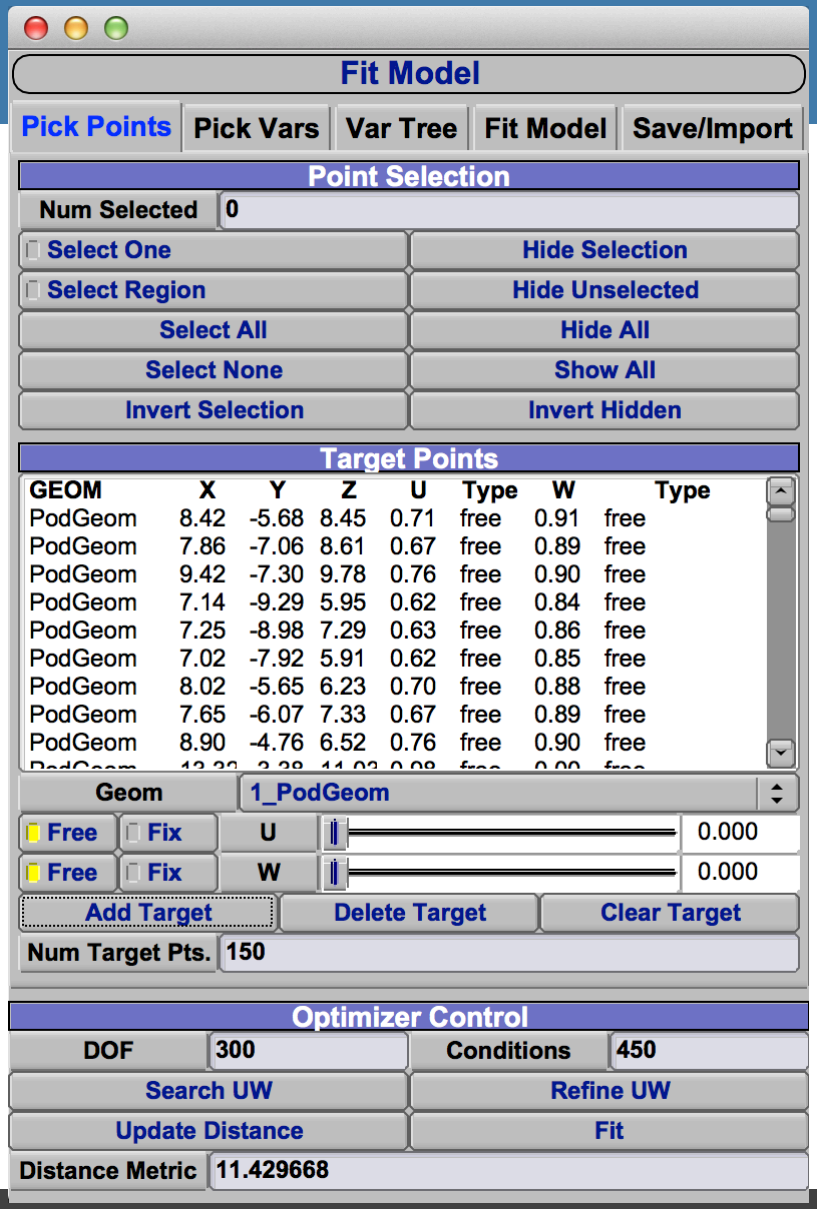

Pick Vars

- Identify Identify parameters *V*

Parameter Selection

Manipulate Variable List

Variable List

Drop Zone

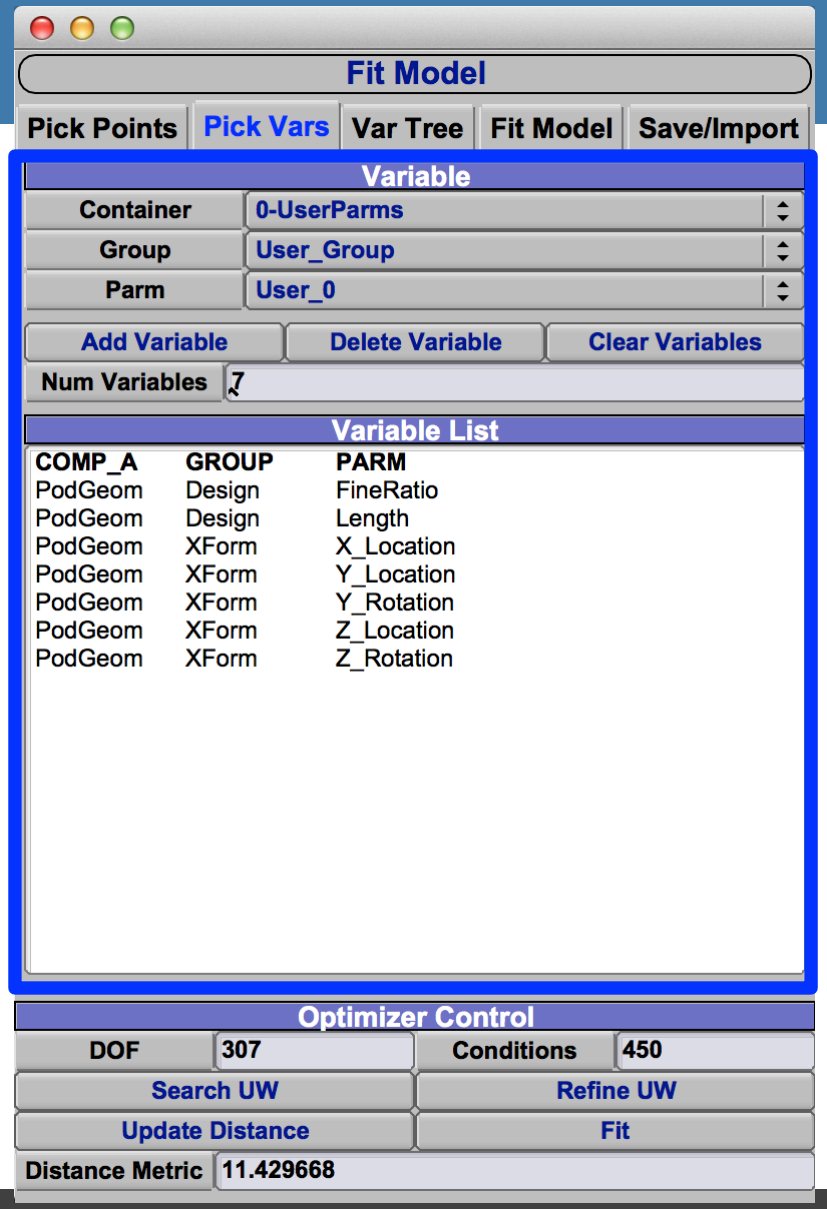

Var Tree

- Identify Identify parameters *V*

Parameter Selection

Drop Zone

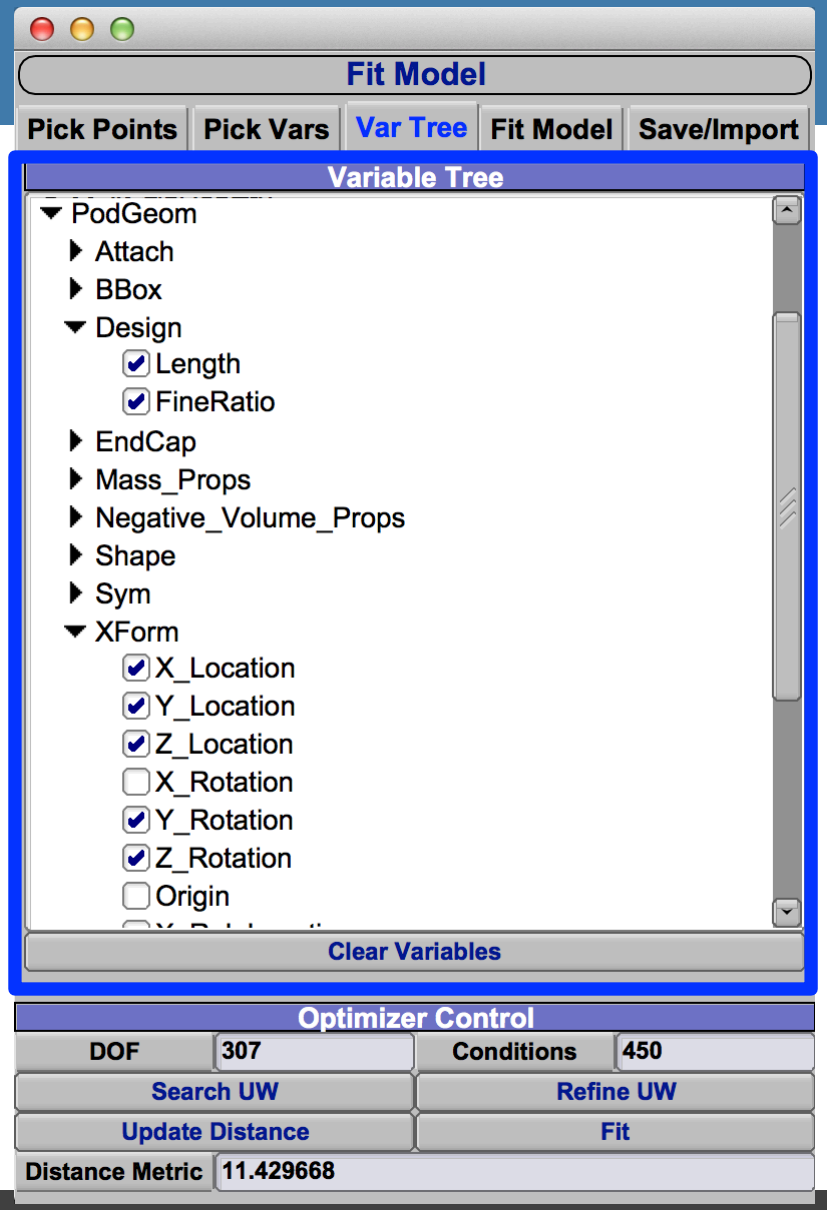

Fit Model

- Control the variables

Manual
Variable Controls

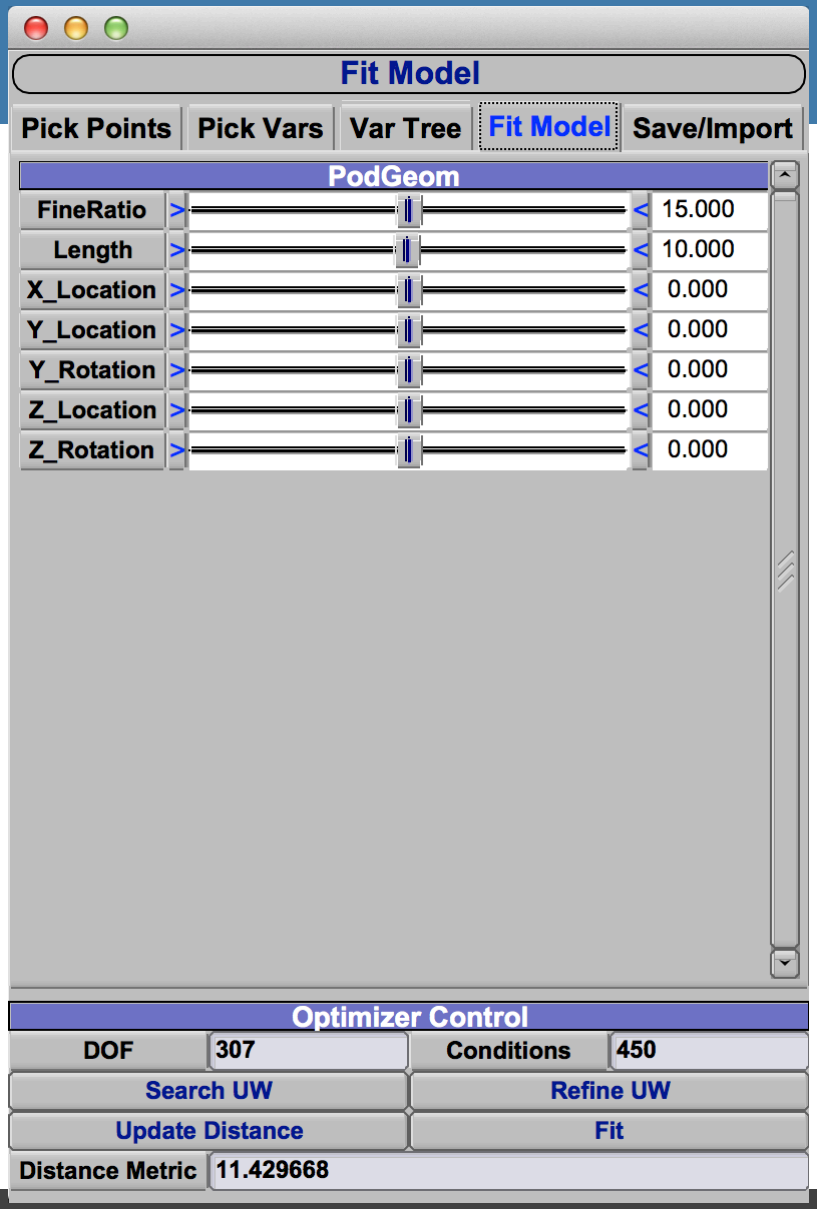

Save/Import

- Save and Import optimization problem

Save

Import
(additive)

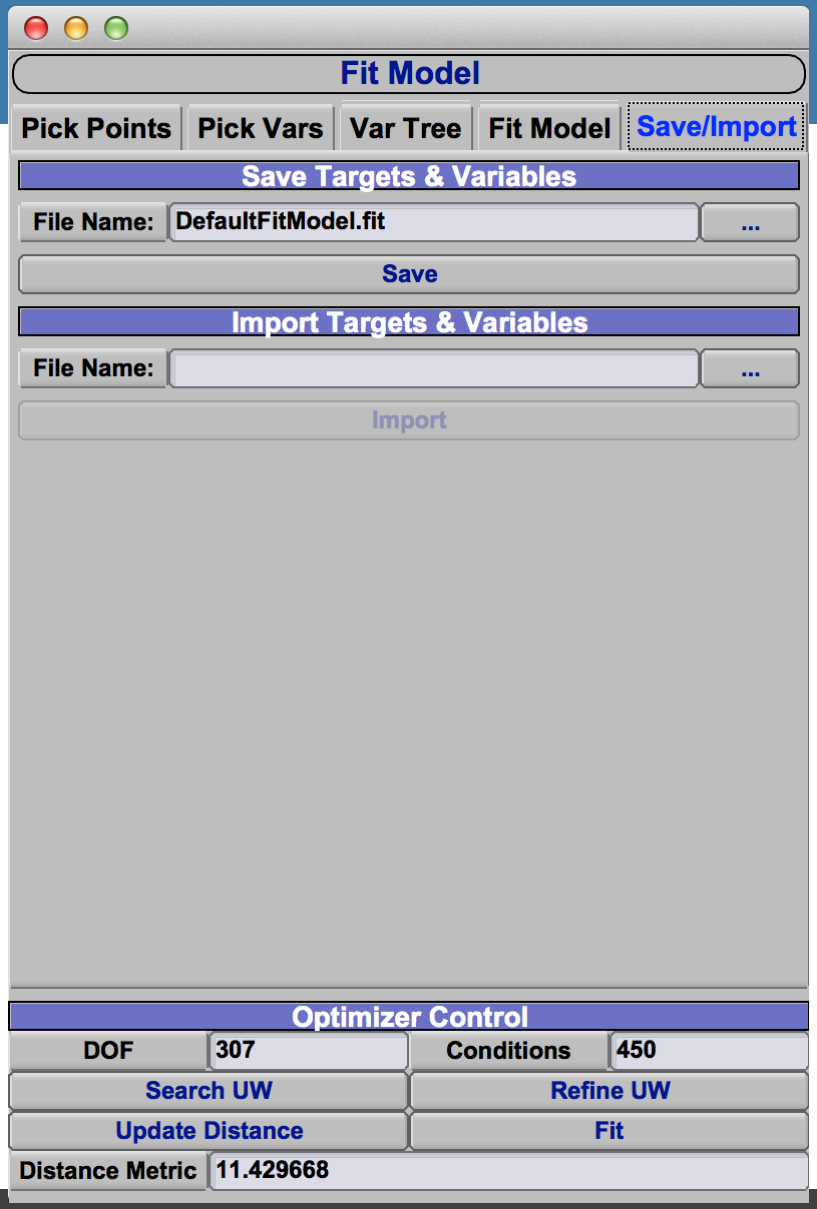

Fit Model

- Control the optimizer

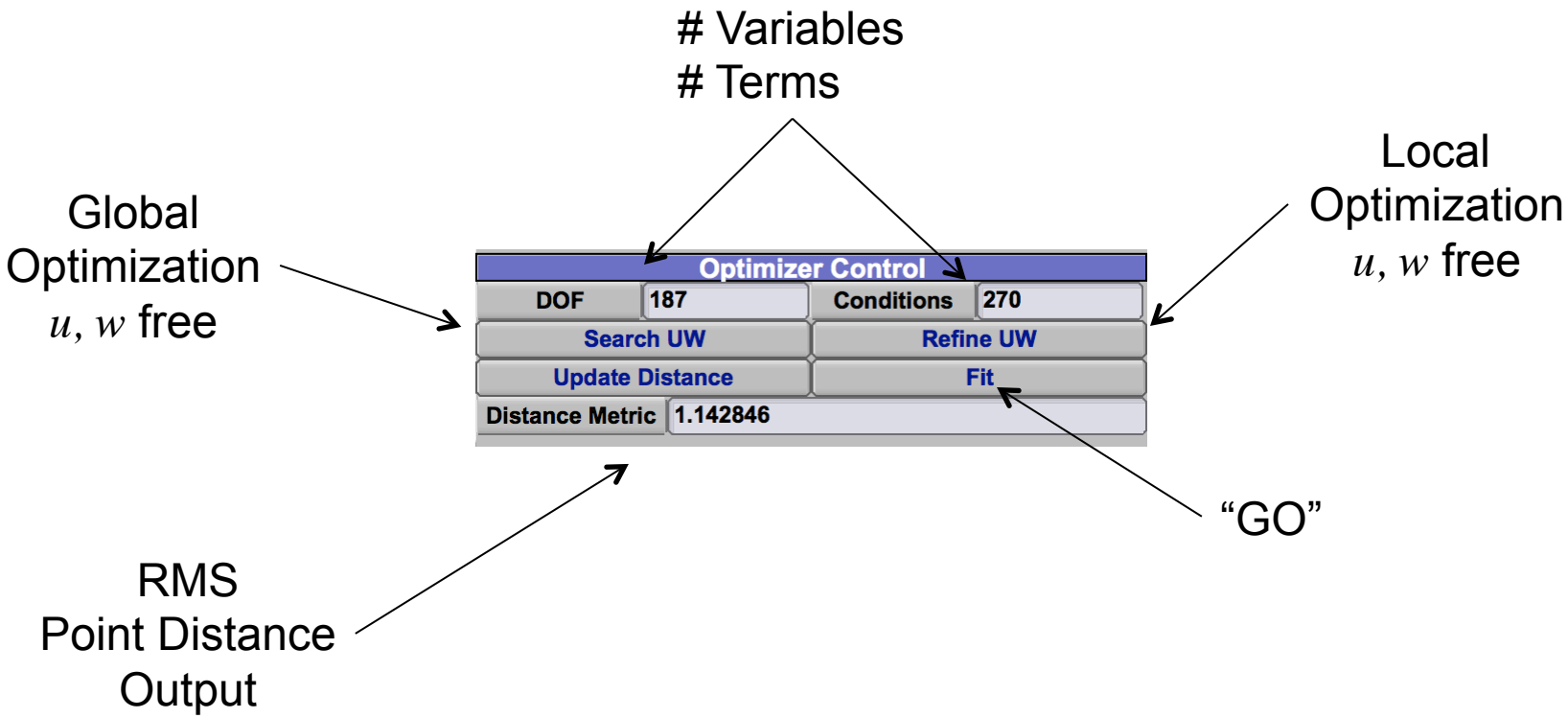

Simple Example

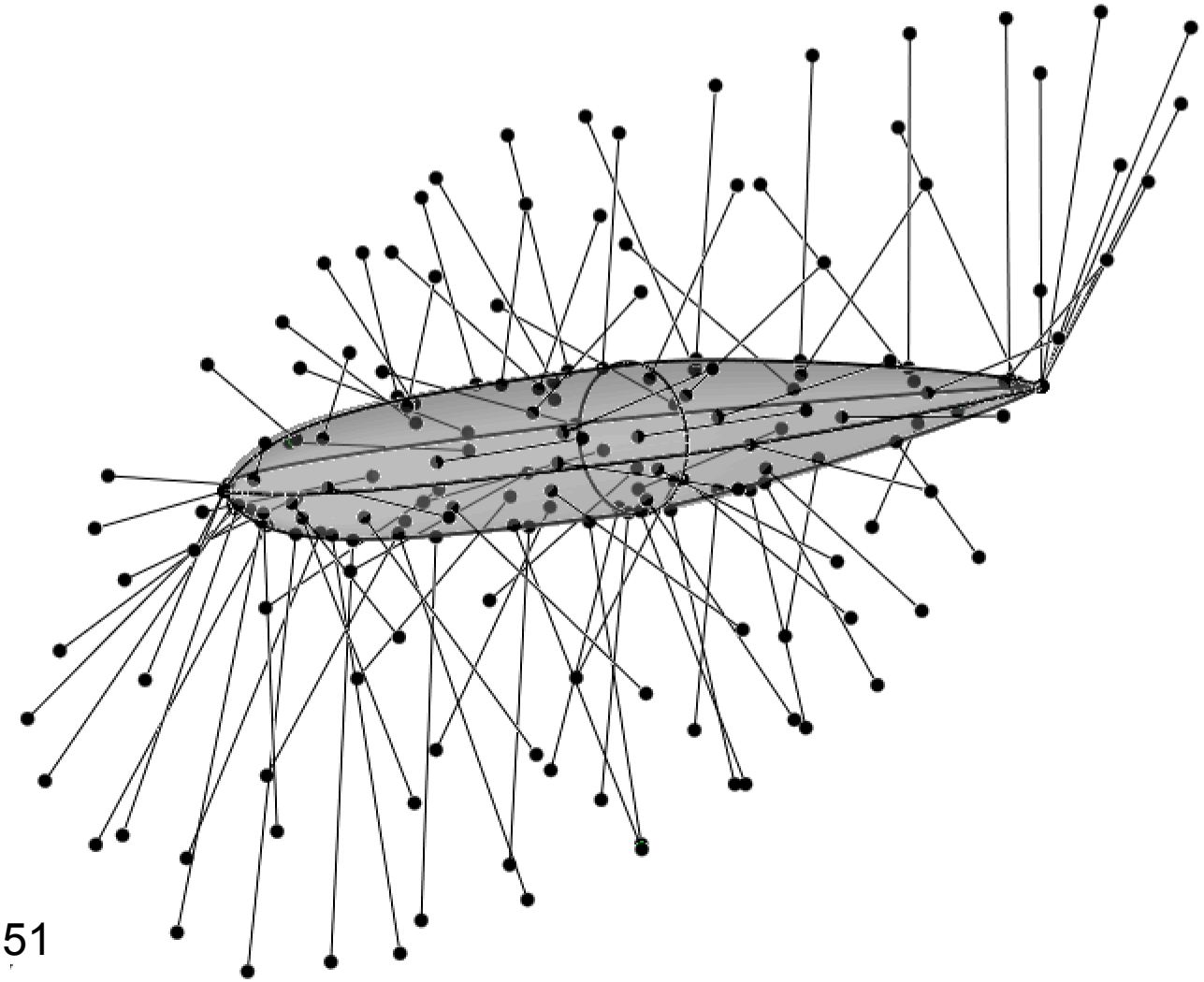

D=2.500251

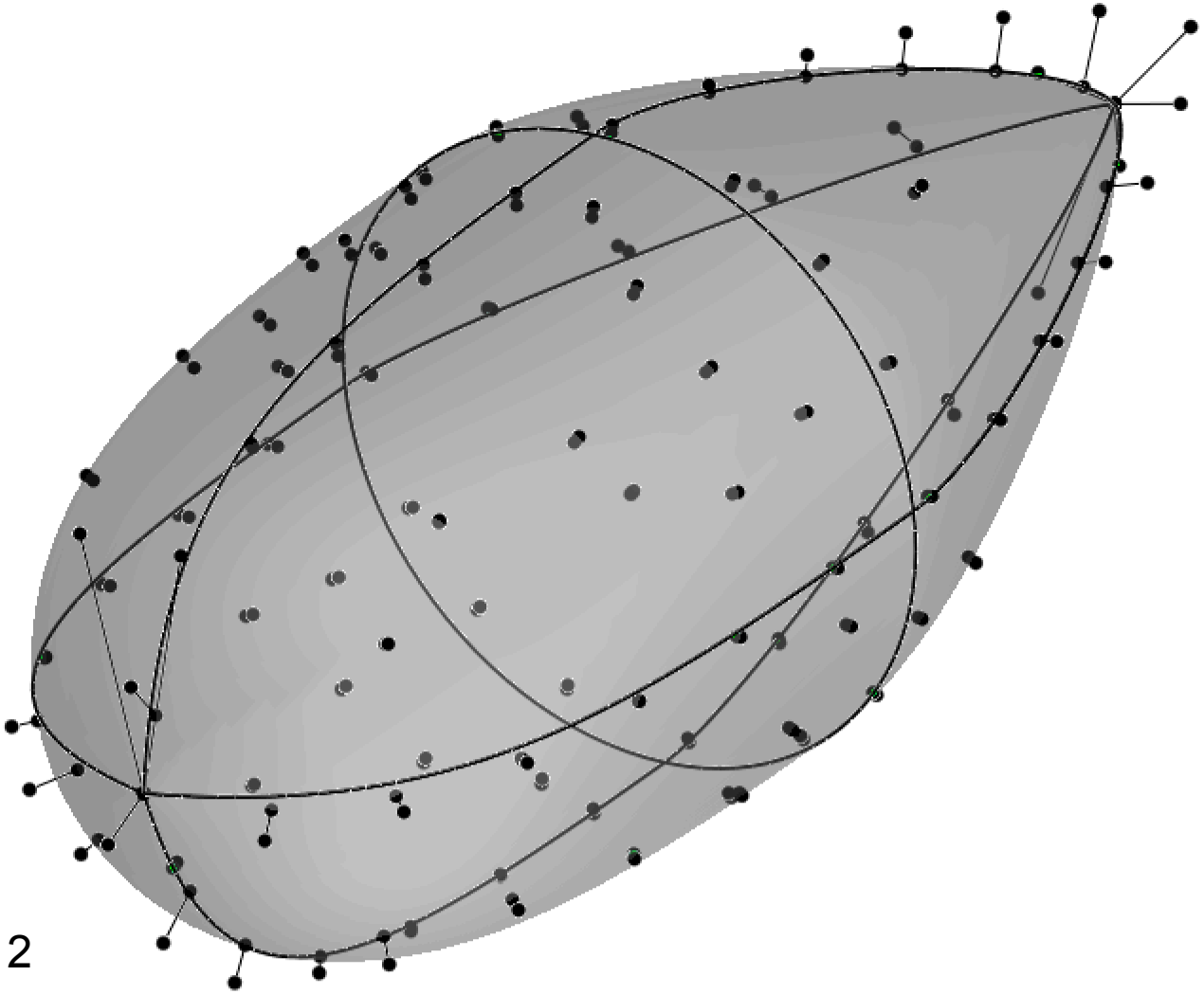

D=0.454112

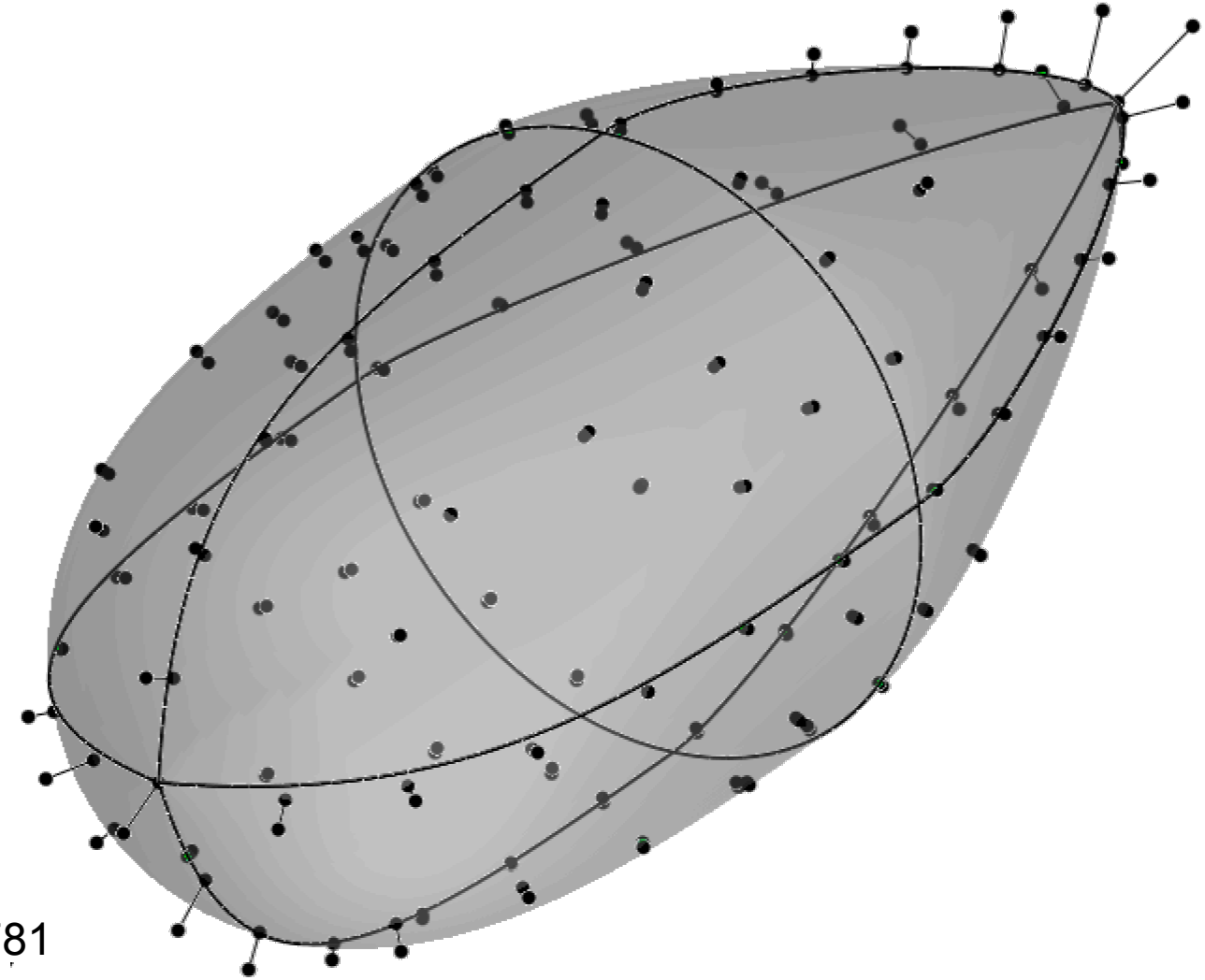

D=0.251781

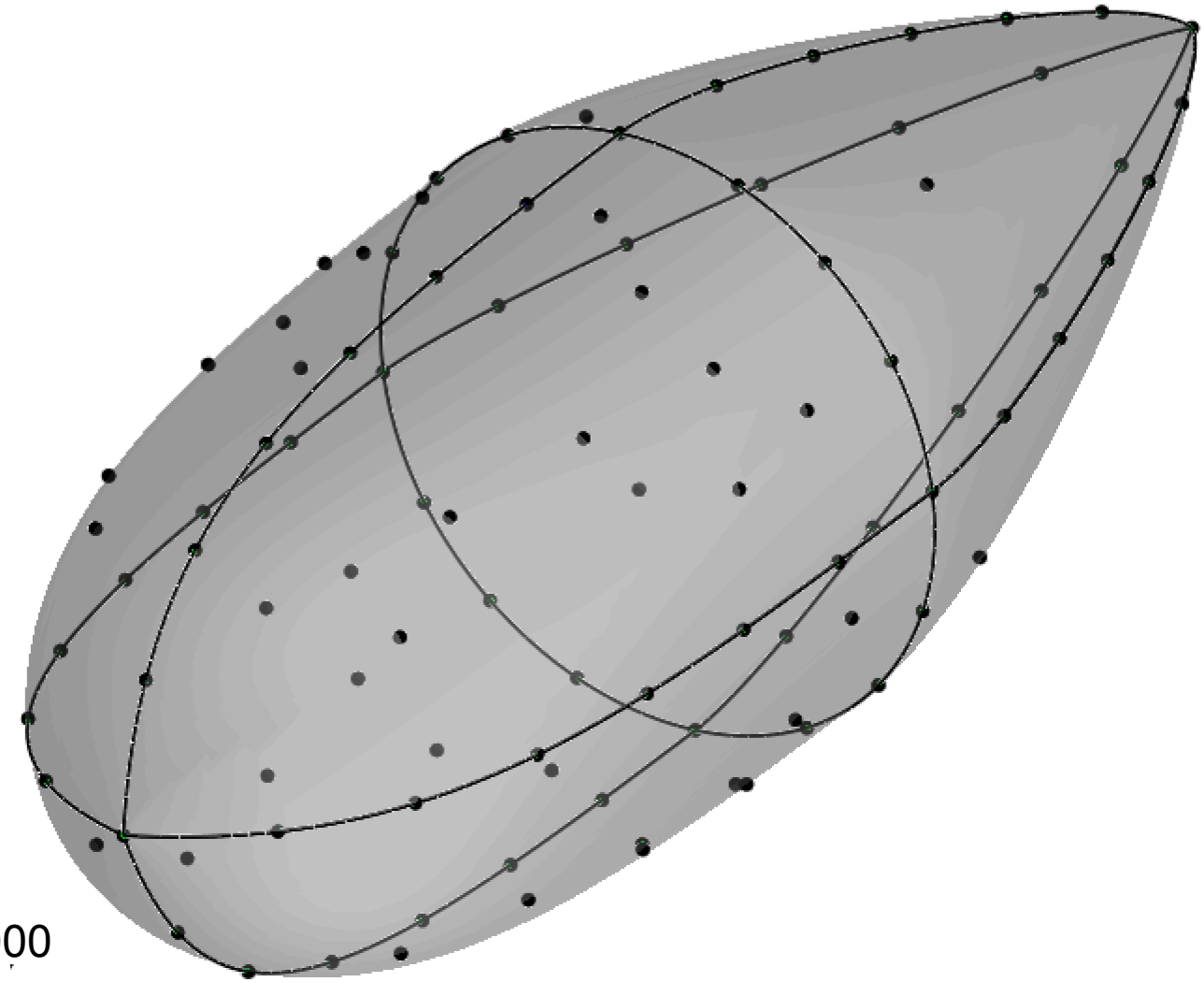

D=0.000000

AGARD AR303 E6

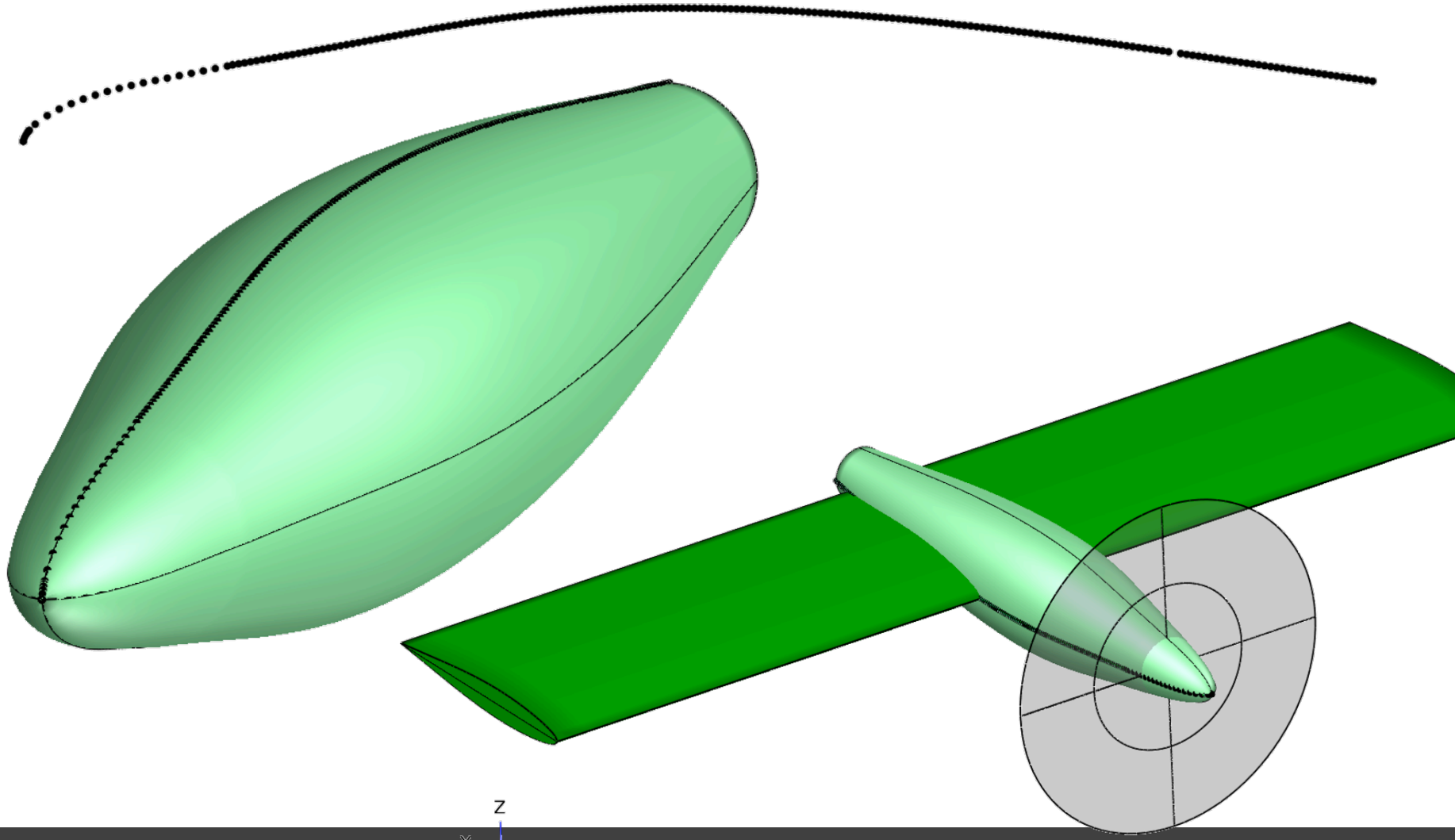

Rutan's Boomerang

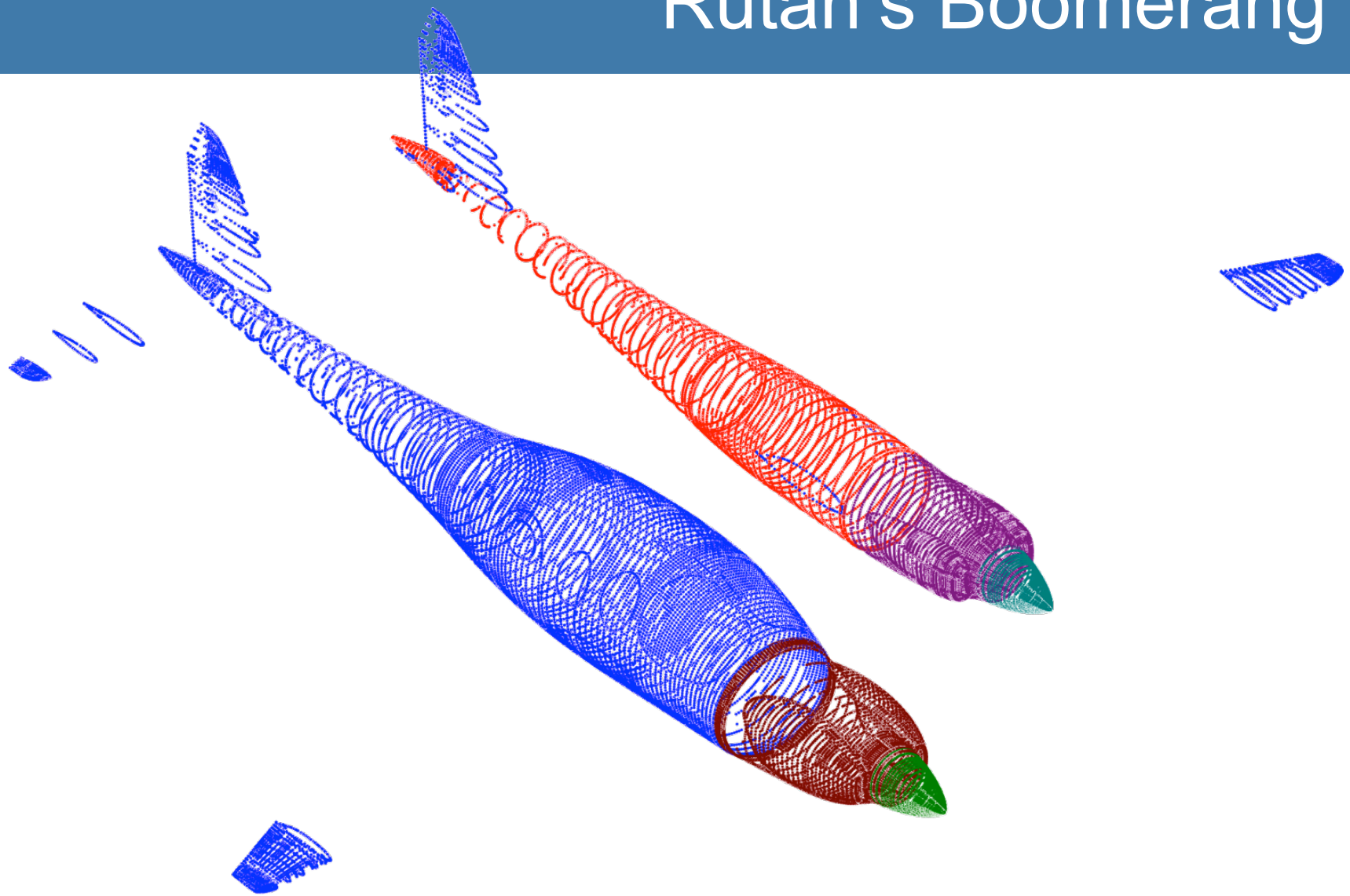

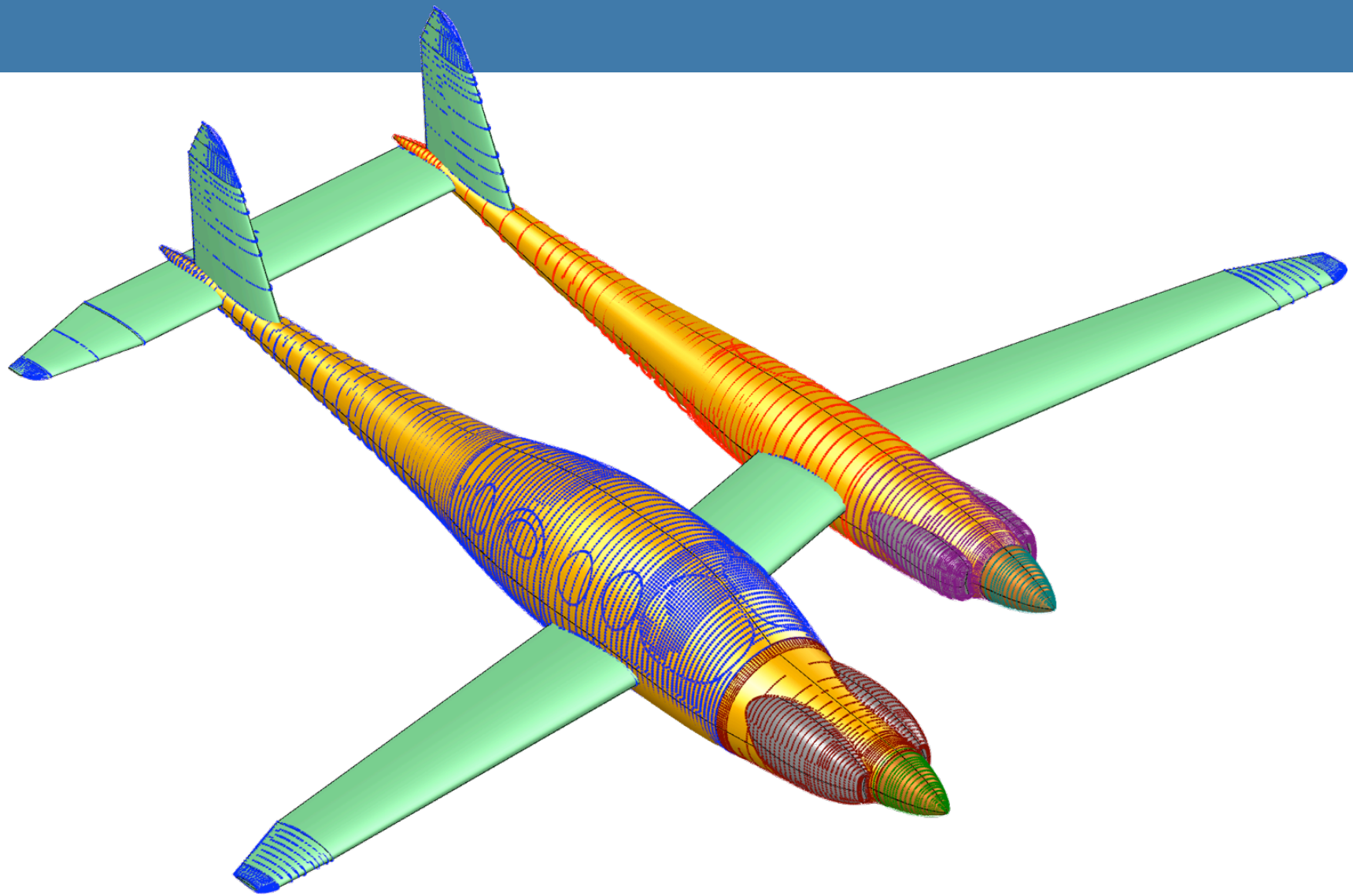

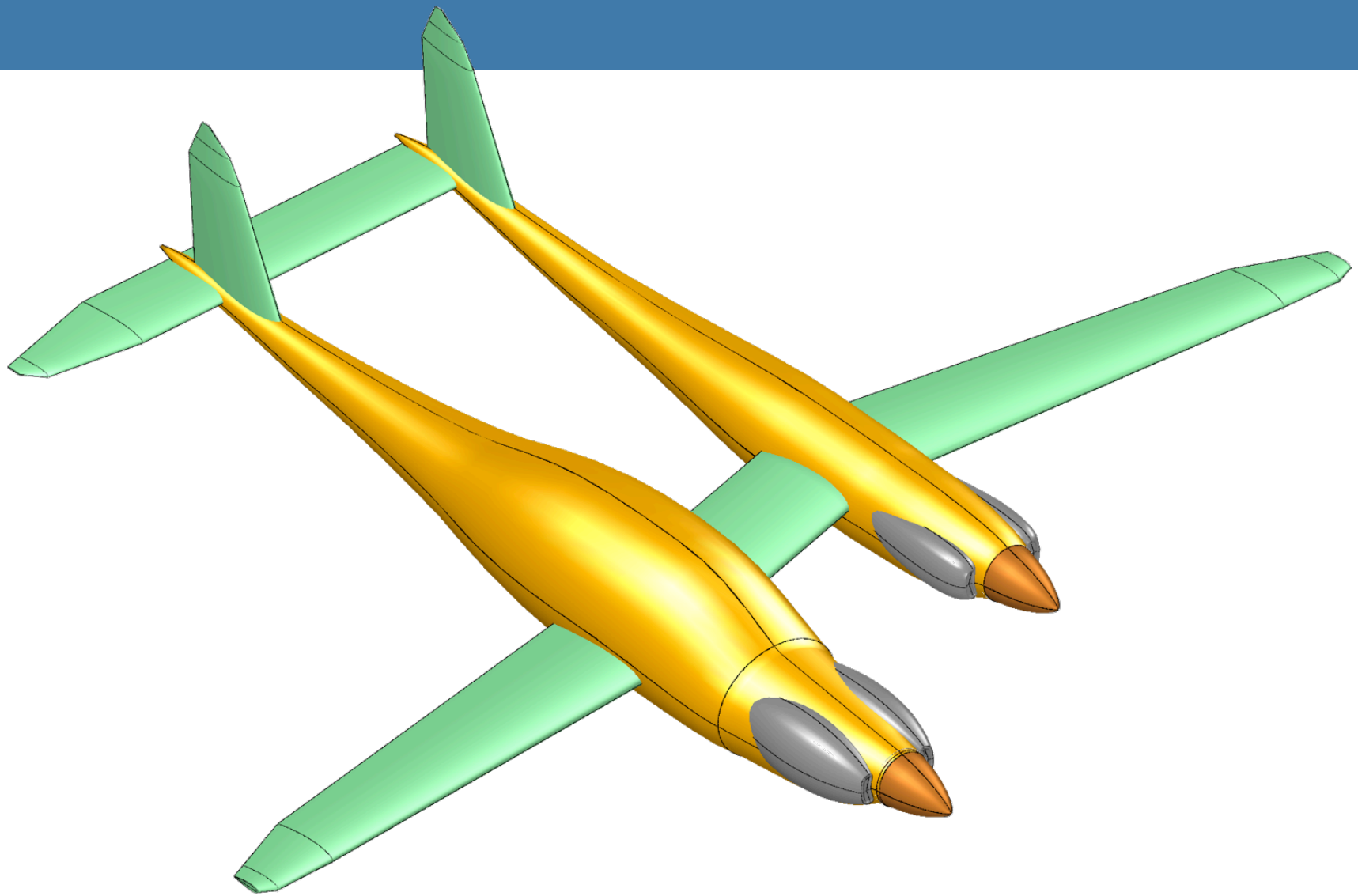

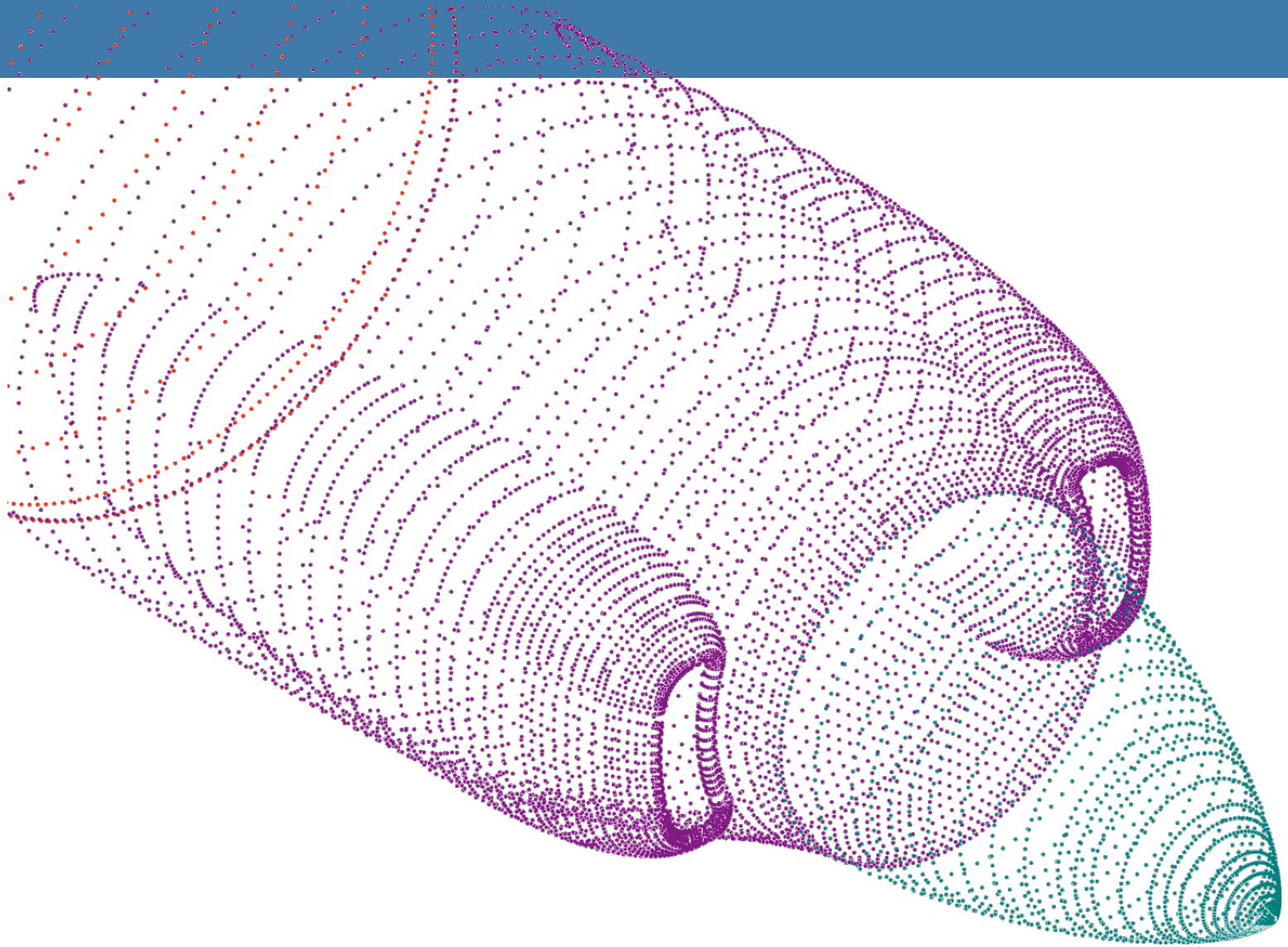

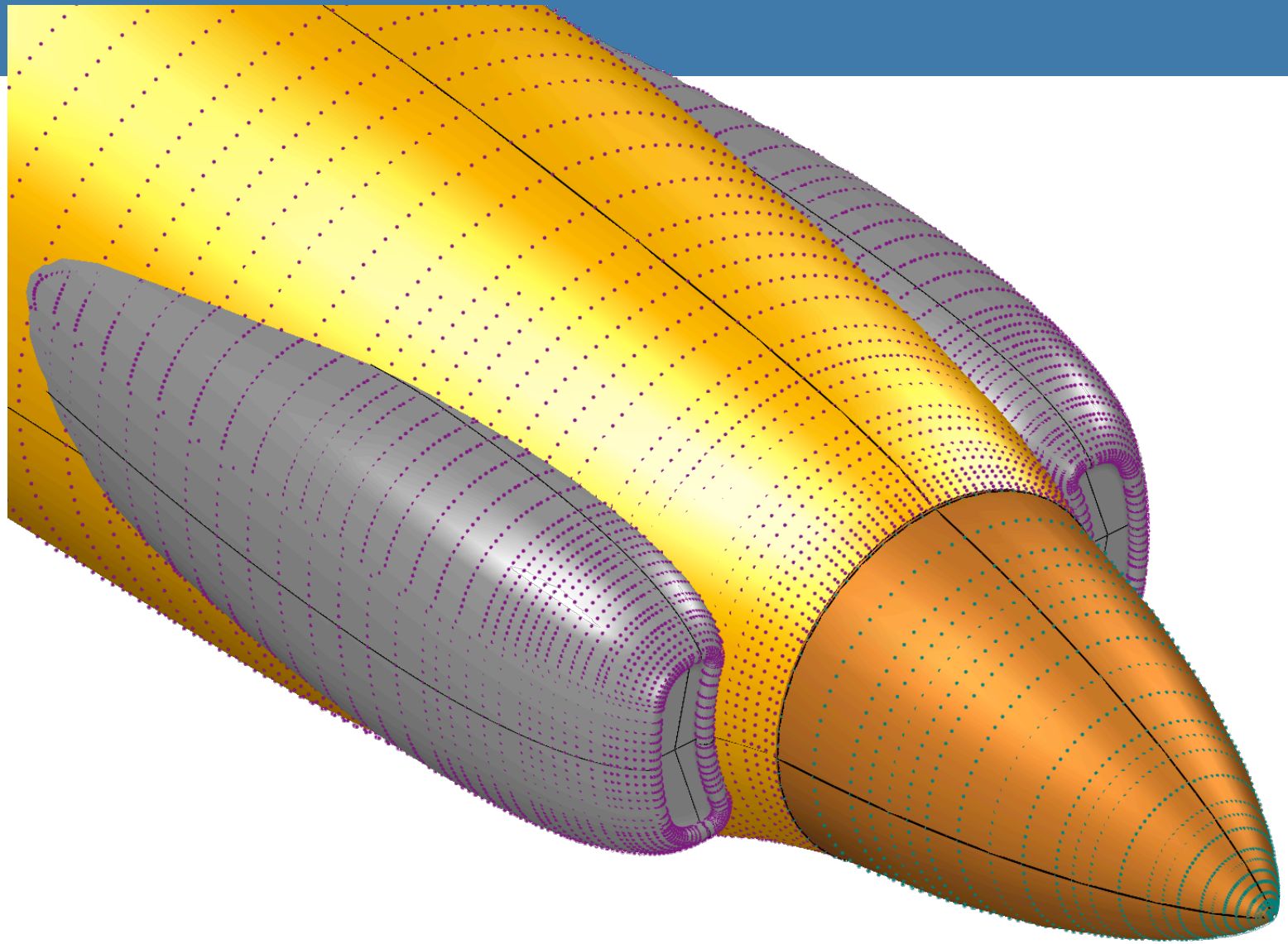

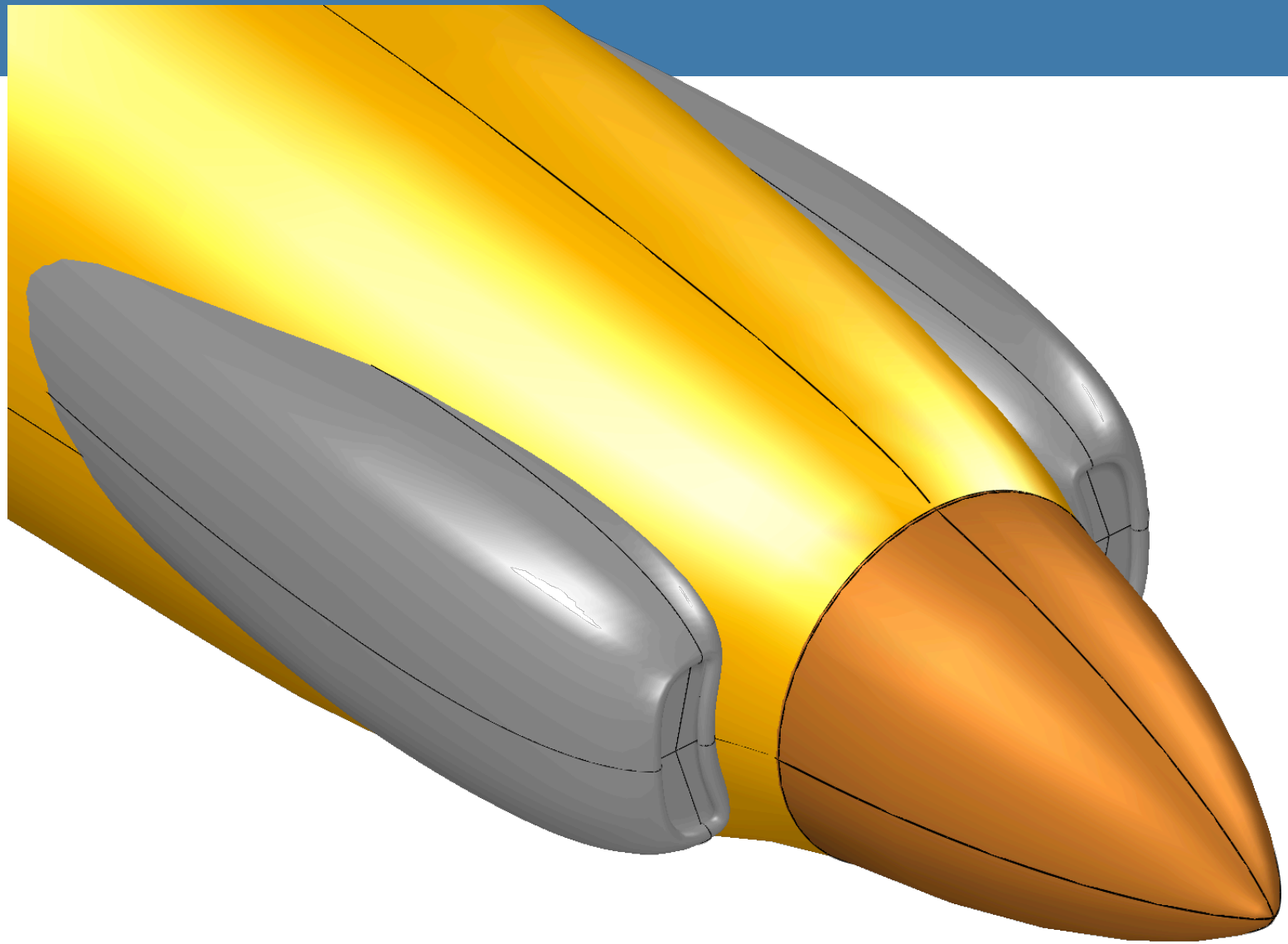

Drela's D8

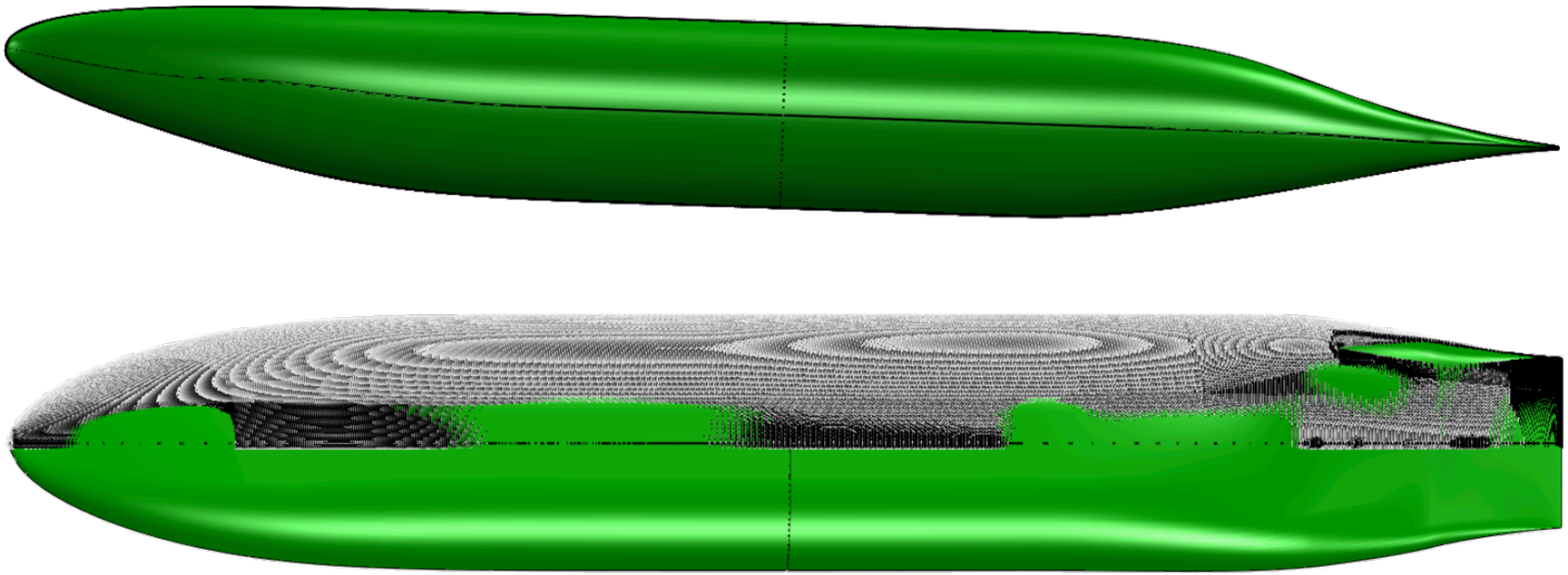

Tecnam P2006

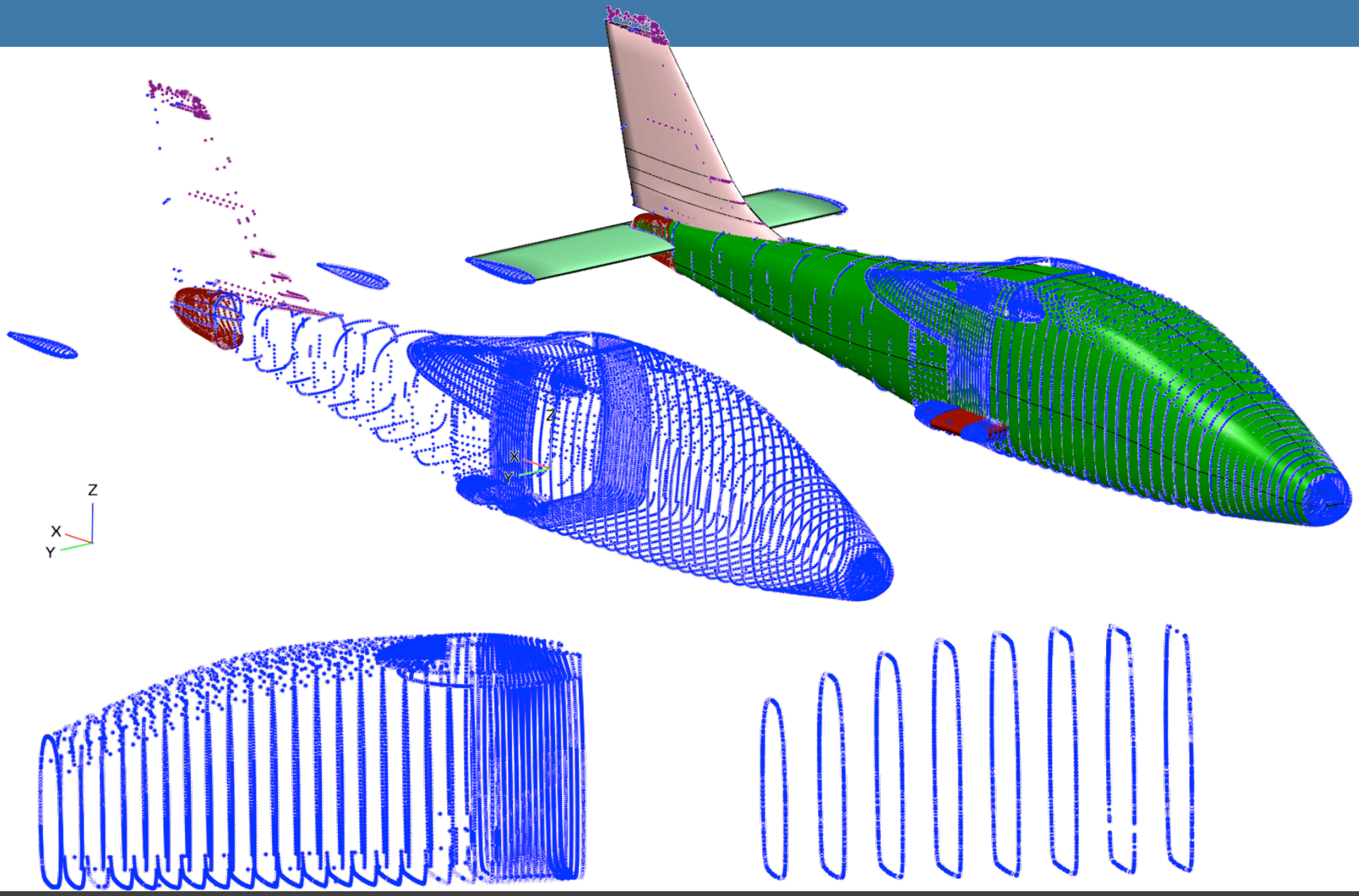

Questions?

Practice