Sensor-to-Sensor System Identification (S2SID) for Passive Health Monitoring

Sunil L. Kukreja, DFRC

Dennis S. Bernstein, U. Michigan

Contributors: Ben Coffer, Khaled Aljanaideh, and Daniel Dionne

Outline

- Motivation
- Approach
- Findings
- Conceptual examples
- Application to SOFIA

Motivation

- Structural integrity assessed by flight history (takeoff/landing cycles, aging, etc.)
  - Verified by inspections and testing
- Can anomalous faults be detected inexpensively and reliably?
- Idea: Use only sensor data measured during flight to build diagnostic models
  - Changes in these models can suggest anomalous faults and the need for unscheduled inspections

Active Health Monitoring

NARI

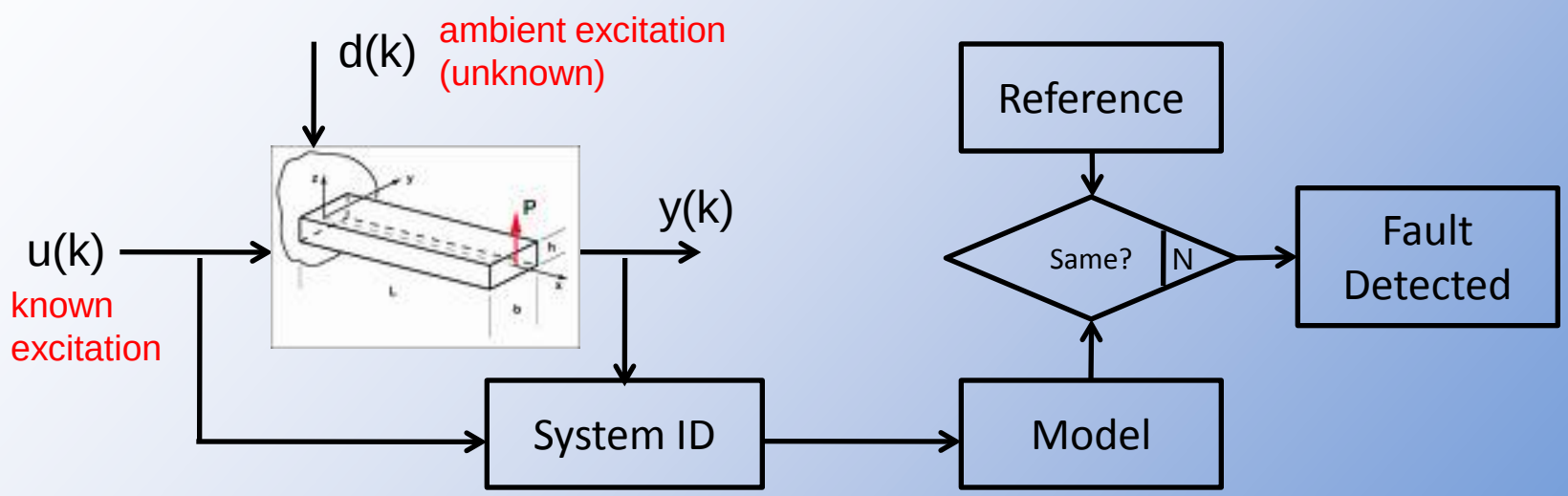

- Excite the structure in a known, controlled manner
  - Ground-based testing
- Use input data and response measurements to construct models and compare to prior models
- Changes in these models indicate changes to the structure

Passive Health Monitoring

- Exploit the fact that the aircraft is excited by unknown, ambient disturbances (aerodynamic and inertial loads)
- Collect data from multiple structural sensors
  - Accelerometers, strain gauges, etc.
- Classify sensors as “pseudo-inputs” and “pseudo-outputs”
  - Use system identification to construct a pseudo-transfer function (PTF) model and compare to prior models

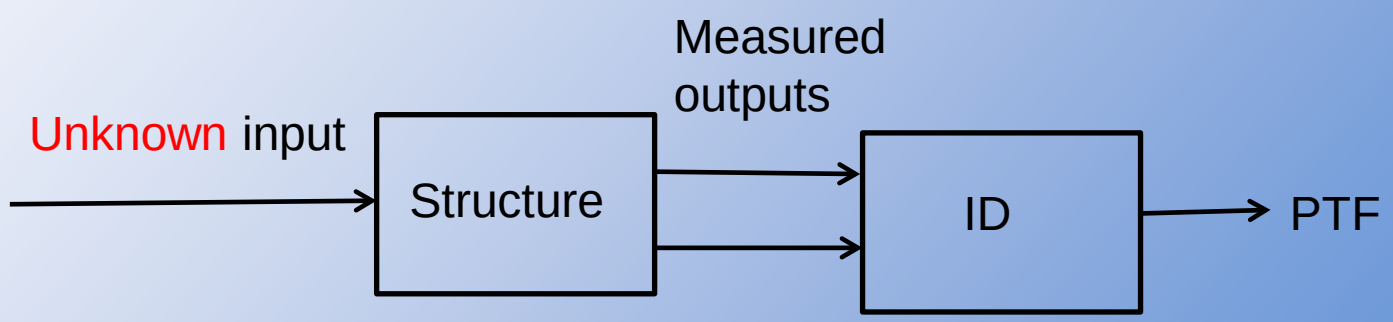

Identification of PTFs

NARI

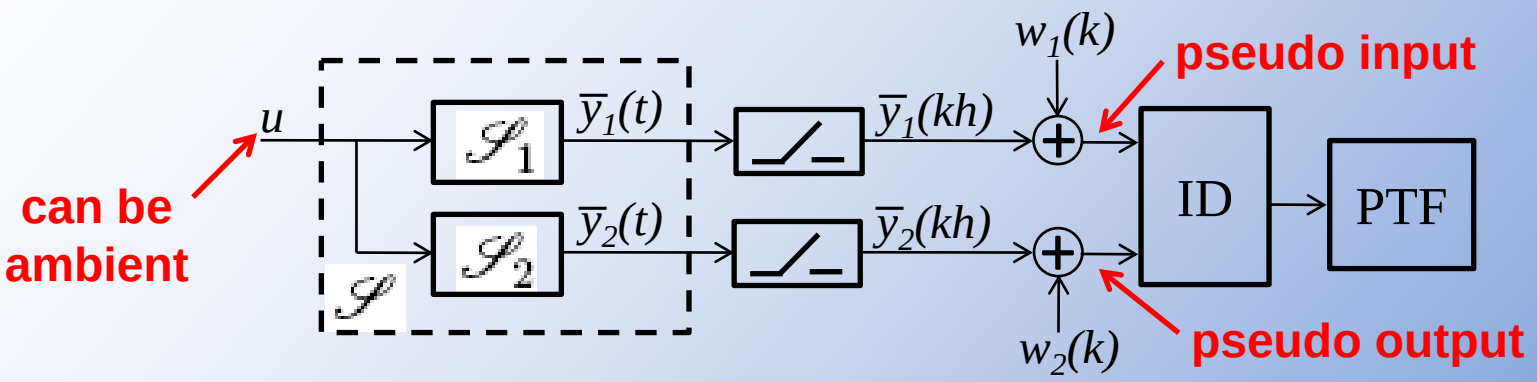

- Detect faults by looking for changes in the PTF
  - Monitor estimated impulse response
    - Markov parameters H_i

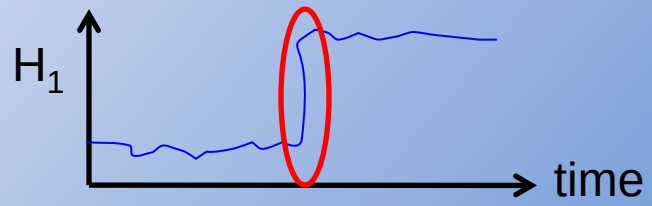

Issues and Challenges

- Structural faults must be manifested by changes in the estimated parameters of the identified model
  - Identifiability issue
  - Impulse response reflects stiffness and damping changes
- The estimated parameters must be sufficiently accurate to detect structural faults
  - Sensitivity issue
  - Depends on sensor resolution and noise environment
- The identified model must be <u>independent</u> of:
  - The initial conditions
  - Knowledge about the excitation
  - Assumptions about its statistical properties

PTF Derivation—SISO Case

NARI

We re-write

$$x(k+1) = Ax(k) + Bu(k)$$
$$y_i(k) = C_i x(k) + D_i u(k)$$

as

$$\delta(\mathbf{q})y_1 = \eta_1(\mathbf{q})\boxed{u}$$
$$\delta(\mathbf{q})y_2 = \eta_2(\mathbf{q})\boxed{u}$$

where $\delta(\mathbf{q}) \triangleq \det(\mathbf{q}I - A)$ and $\eta_i(\mathbf{q}) \triangleq C_i \mathrm{adj}(\mathbf{q}I - A)B + D_i\delta(\mathbf{q})$

Then

u cancels!

$$\eta_2(\mathbf{q})\delta(\mathbf{q})y_1 = \eta_2(\mathbf{q})\eta_1(\mathbf{q})u$$
$$\eta_1(\mathbf{q})\delta(\mathbf{q})y_2 = \eta_1(\mathbf{q})\eta_2(\mathbf{q})u$$

$$\Longrightarrow \quad \delta(\mathbf{q})\left[\eta_2(\mathbf{q})y_1 - \eta_1(\mathbf{q})y_2\right] = 0$$

We can cancel the denominator factor $\delta(\mathbf{q})$

$$y_2 = \frac{\boxed{\delta(\mathbf{q})}\eta_2(\mathbf{q})}{\boxed{\delta(\mathbf{q})}\eta_1(\mathbf{q})}y_1$$

Pseudo Transfer Function (PTF) changes **from** y_1 **to** y_2

Approach extends to multiple disturbances u, where n disturbances requires n+1 sensors

PTF Properties

- A PTF is a ratio of numerators of transfer functions
  - Modal frequencies (poles) cancel unless a sensor is located at a node
  - A transmissibility is a special type of a PTF
- The PTF thus captures anti-resonances (zeros)
  - Nonminimum-phase (unstable) zeros can give rise to an unstable PTF
  - Could we find such characteristics in real data from a real aircraft?

Dependence on Excitation

- A PTF is <u>independent</u> of the excitation signal
  - For example, the spectrum of the excitation
- We must obtain estimates of PTFs that are:
  - Independent of the excitation signal
  - Independent of <u>knowledge</u> of the excitation signal
  - Independent of <u>assumptions</u> about the statistics of the excitation signal

Phase I Research Objectives

- Persistency and identifiability
  - Is data spectrally rich enough to construct useful PTFs?
- Accuracy
  - Does data allow sufficiently accurate PTF estimation?
  - Nonwhite sensor data and correlated sensor noise with unknown statistics present challenges to least squares identification
- Effect of nonlinearities
  - Do the dynamics exhibit nonlinear characteristics?

Identification Methodology

- Research driven by SOFIA data
- We know sensor locations and nature of signals (accelerometer data) but no other signal information is available
  - Excitation is unknown, and no assumptions about its statistics are needed
  - Sensor noise statistics are unknown
- Preprocess data by detrending
- Select signal pairs for PTF estimation
  - Perform correlation and coherence analysis
- Apply identification methods to fit PTFs

Assessment Methodology

- Accuracy is assessed by <u>cross validation</u>
  - Fit using data subset, and compute prediction error on another data subset
- Assess repeatability and accuracy
  - Cross validation based on prediction error
  - Consistency across data subsets
  - Consistency across techniques (e.g., frequency versus time domain, IIR versus FIR)
- Use conceptual examples to explain findings

Findings

- Distant sensors are poorly correlated
  - Not surprising
- No significant nonlinear effects found in data
  - Greatly simplifies PTF identification
- Nonwhite pseudo-input and noise suggest that infinite impulse response (IIR) model fits are inaccurate
- Developed finite impulse response (FIR) approach
- PTF estimates indicate nonminimum-phase dynamics
  - Imply that PTFs are unstable-----but all data are bounded
  - Manifested in <u>noncausal</u> impulse response

Simulation Example

- Mass-spring-damper system (3 masses)
- Random forcing on m_2
- PTF from v_1 to v_3

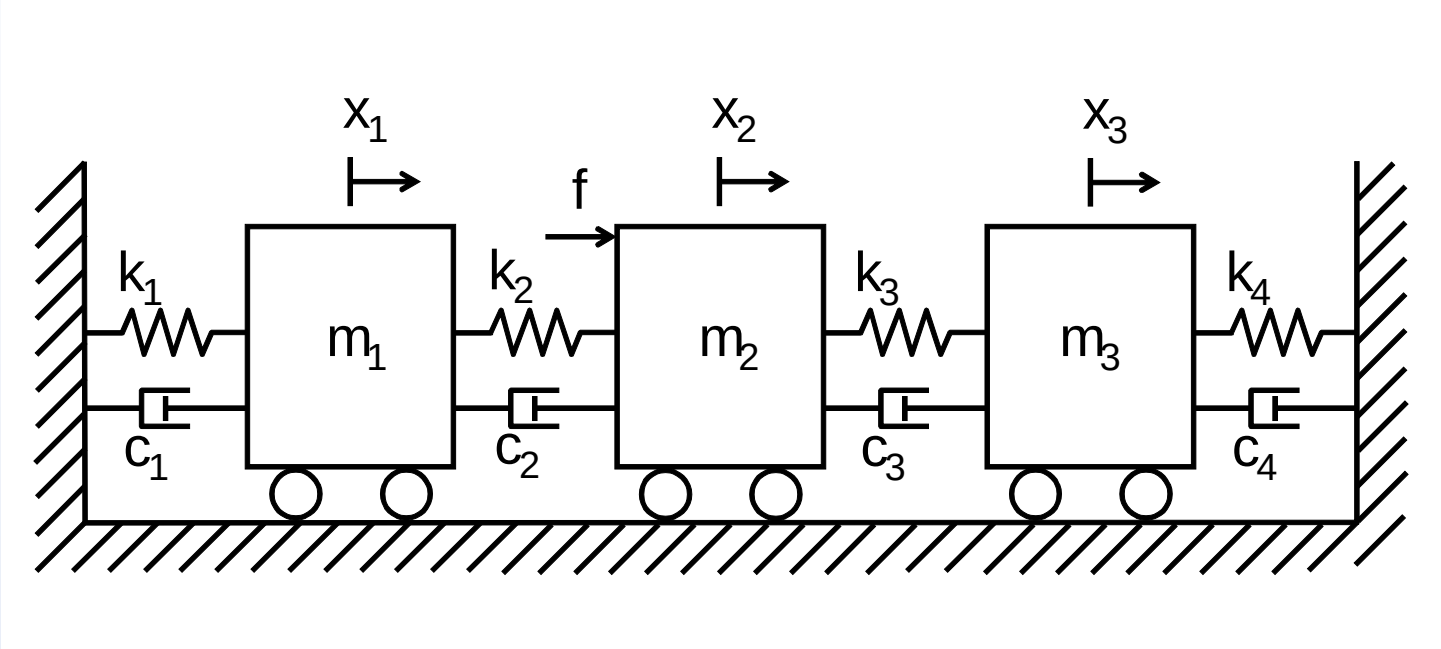

Identification Methodology

- Fit FIR (finite impulse response) PTF to measured velocities
  - FIR model is more accurate in the presence of sensor noise
- Prior to estimation, delay output relative to input for a range of delays
- Assess fit accuracy by computing prediction error for each value of the delay

Case 1: PE Versus Output Delay

- Prediction accuracy (cross validation) <u>degrades</u> as output delay increases

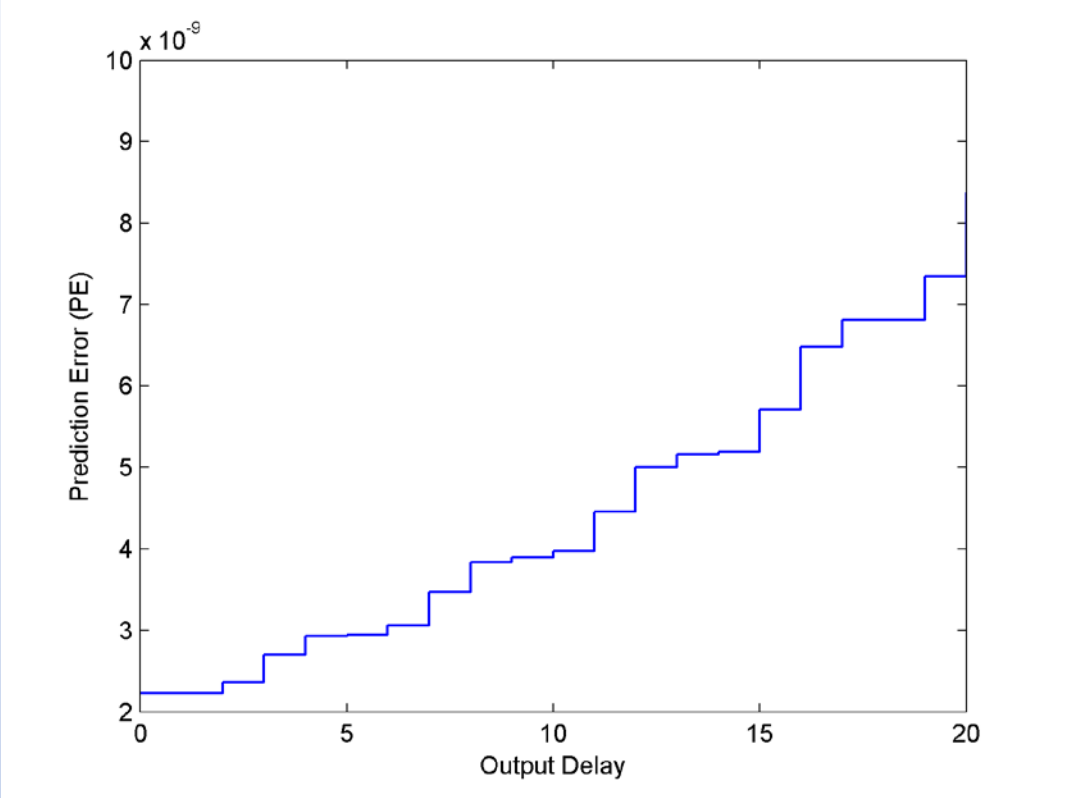

Case 1: Estimated Impulse Response

- Causal response, as expected

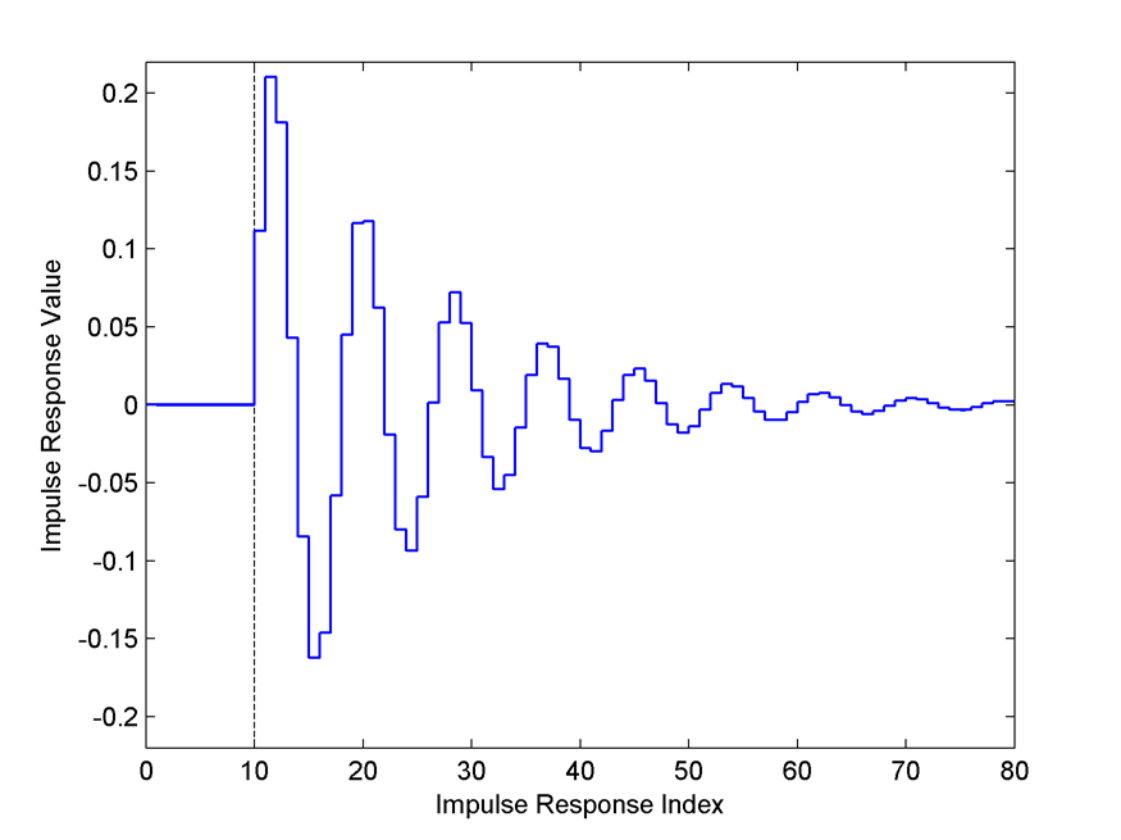

Case 2: PE Versus Output Delay

- Prediction accuracy (cross validation) <u>improves</u> as output delay increases! Why??

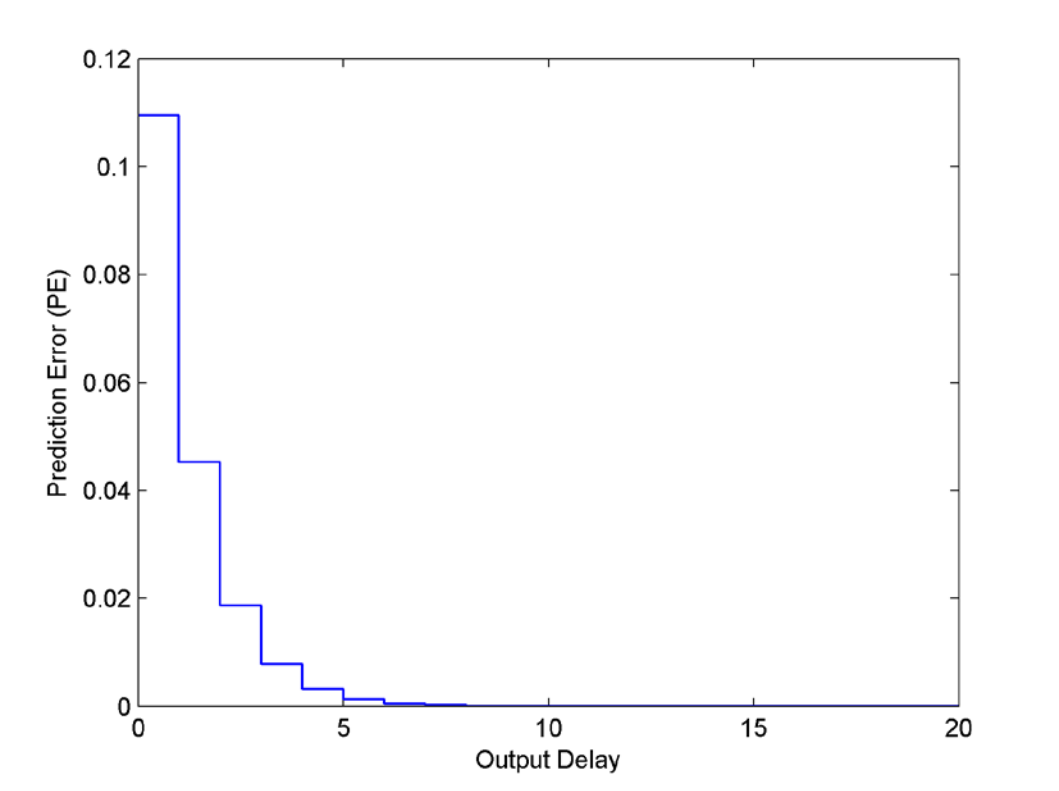

Case 2: Estimated Impulse Response

- Impulse response is not causal!

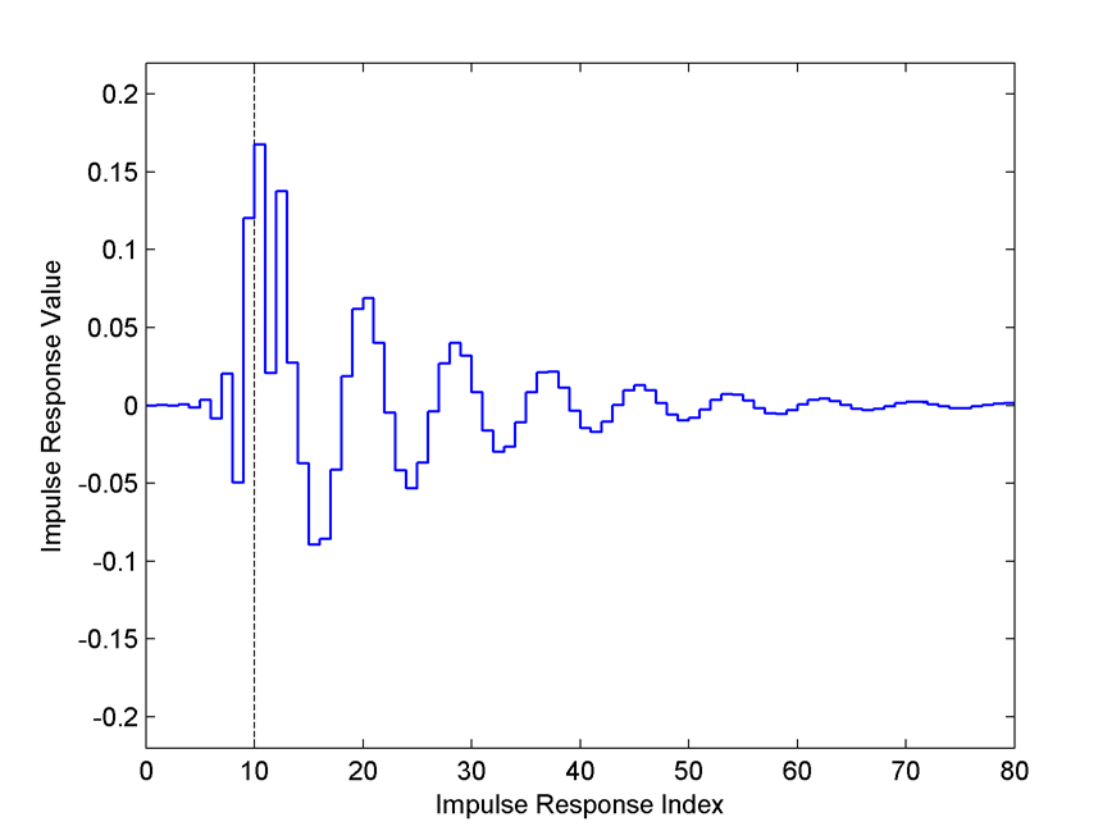

Explanation

- Parameters for Case 1 give stable PTF
- Parameters for Case 2 give <u>unstable</u> PTF
- FIR fit of unstable PTF produces noncausal impulse response
  - Instability is not discernible from the data
    - The data are bounded despite the fact that the PTF is unstable
  - The noncausal component of the PTF impulse response is a manifestation of the unstable PTF and an artifact of employing an FIR model structure
    - FIR model structure is used because it provides the best PE

SOFIA: Stratospheric Observatory for Infrared Astronomy

NARI

NASA Dryden Flight Research Center Photo Collection
http://www.dfrc.nasa.gov/Gallery/Photo/index.html
NASA Photo: ED07–0100–09 Date: May 10, 2007 Photo By: Jim Ross

NASA's Boeing 747SP SOFIA airborne observatory soars over a bed of puffy clouds during its second checkout flight over the Texas countryside on May 10, 2007.

Sensors Locations

NARI

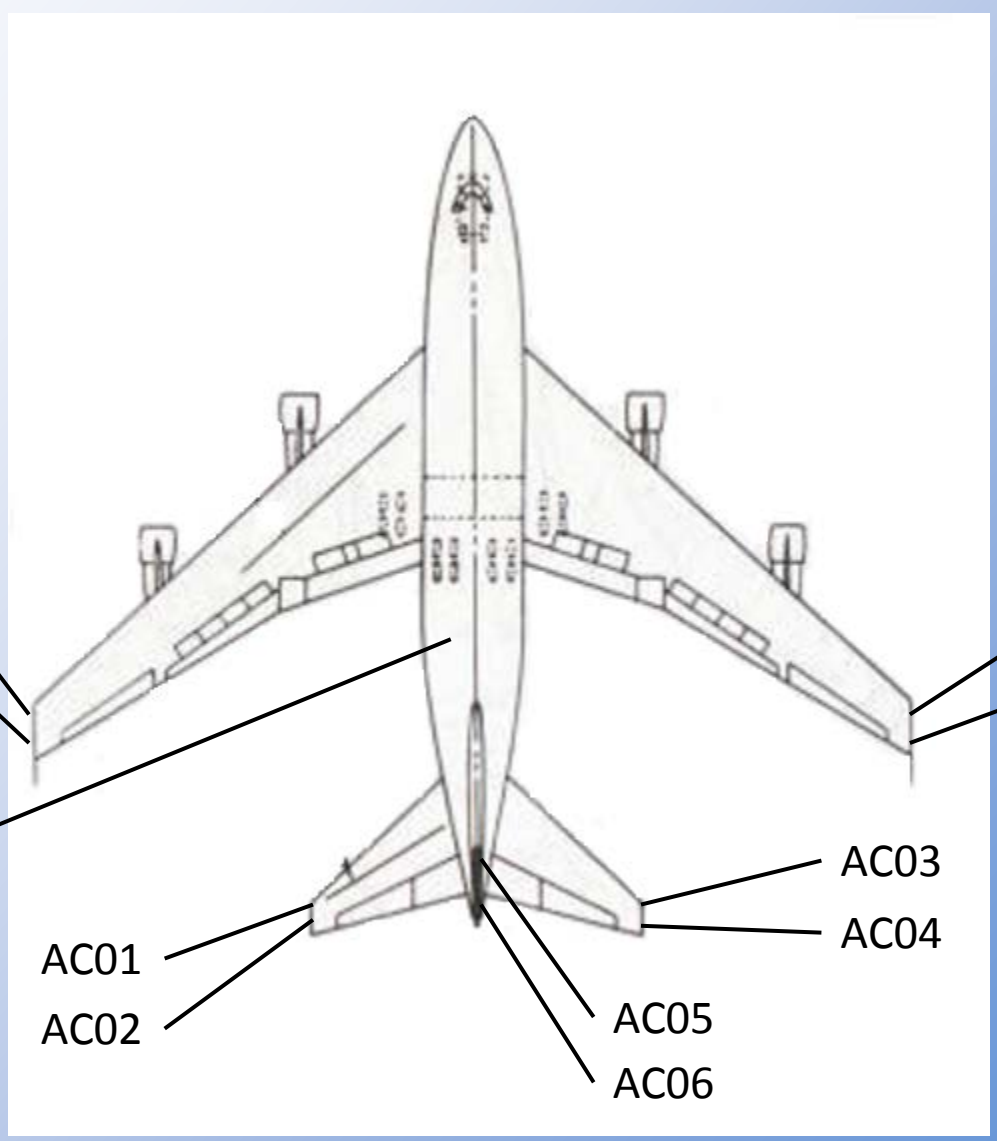

Properties of the Sensors

NARI

Table 1. Quantization Analysis - Range and Effective Bits

Signal	Output Range (m/s^2)	Output Resolution (m/s^2)	Bins	Effective Bits	Location
AC01	21.001	0.0261	805	9.653	Left hand horizontal stabilizer tip front spar, vertical direction
AC02	6.897	0.0257	268	8.066	Left hand horizontal stabilizer tip rear spar, vertical direction
AC03	16.891	0.0261	647	9.338	Right hand horizontal stabilizer tip front spar, vertical direction
AC04	28.632	0.0270	1138	10.152	Right hand horizontal stabilizer tip rear spar, vertical direction
AC05	4.619	0.0259	171	7.418	Vertical stabilizer front spar, lateral direction
AC06	4.608	0.0251	178	7.476	Vertical stabilizer rear spar, lateral direction
AC07	4.717	0.0259	188	7.555	Left hand wing tip, front spar, lateral direction
AC08	5.549	0.0268	214	7.741	Left hand wing tip, rear spar, lateral direction
AC09	5.582	0.0260	208	7.700	Right hand wing tip, front spar, lateral direction
AC10	4.417	0.0250	170	7.409	Right hand wing tip, rear spar, lateral direction
AC103	0.476	0.0251	19	4.248	Aperture acceleration
AC104	0.752	0.0251	30	4.907	Aperture acceleration
AC105	1.579	0.0251	63	5.977	Aperture acceleration
AC106	1.027	0.0251	41	5.358	Aperture acceleration
AC107	0.526	0.0251	21	4.392	Lower flexible door acceleration
AC108	0.927	0.0251	37	5.209	Rear flexible door acceleration

Data Preprocessing

1) Remove the mean from both input and output data.
2) Detrend both input and output data in order to remove nonstationary behavior.

Problem Setup (Algorithm)

- Use AC05 as pseudo-input and AC06 as pseudo-output

  - AC05 location: vertical stabilizer, front spar, lateral direction

  - AC06 location: vertical stabilizer, rear spar, lateral direction
- Divide data into two halves
  - Use first half for model fitting
  - Use second half for model validation
- Study the effect of output delay on prediction error.
- Choose a suitable output delay.
- Identify the impulse response of the PTF between the pseudo-input and the delayed pseudo-output.

Effect of Pseudo-Output Delay on PE

NARI

- Pseudo-input = AC05, Pseudo-output = AC06
- Use pseudo-output delayed by d steps and choose mu=600+delay
- Compute prediction error

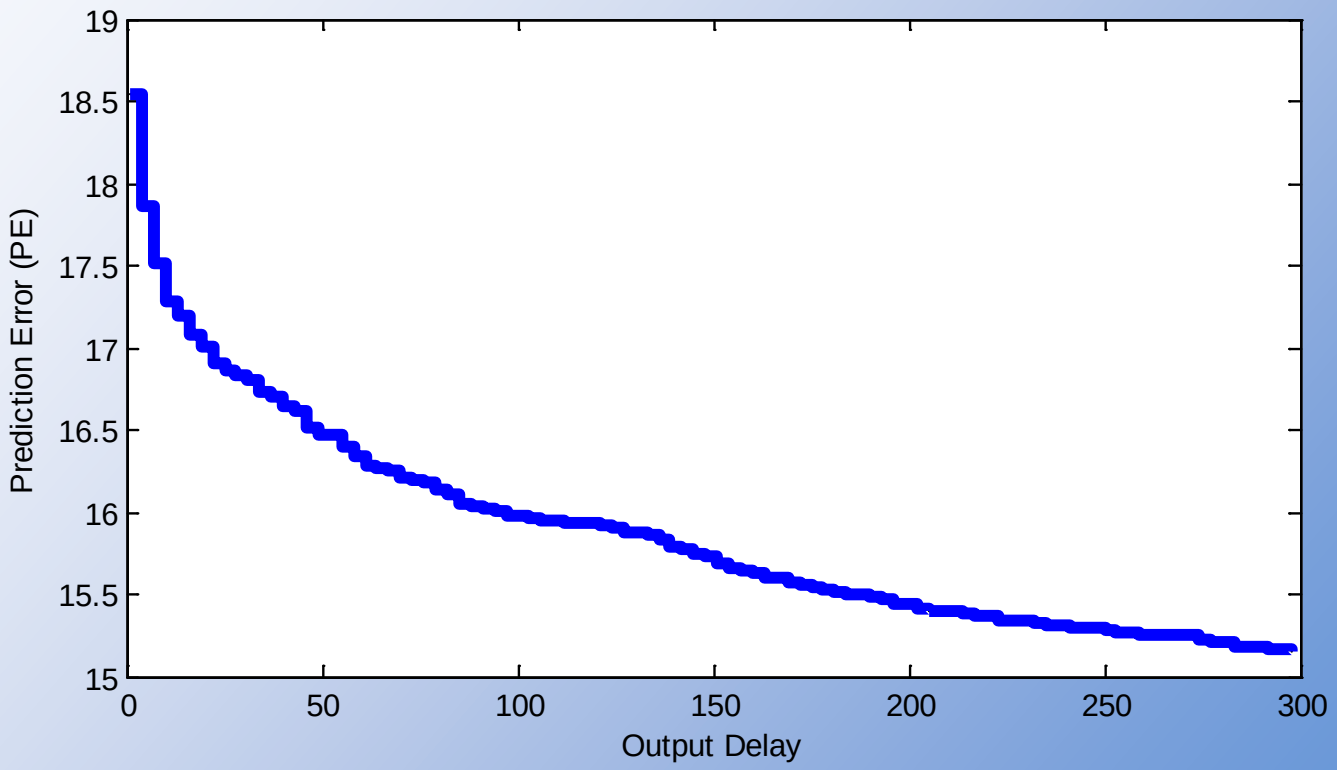

Identified Impulse response

- Estimate impulse response between pseudo-input and delayed pseudo-output using FIR model fit with chosen delay d = 298 steps
- Reveals significant noncausal component

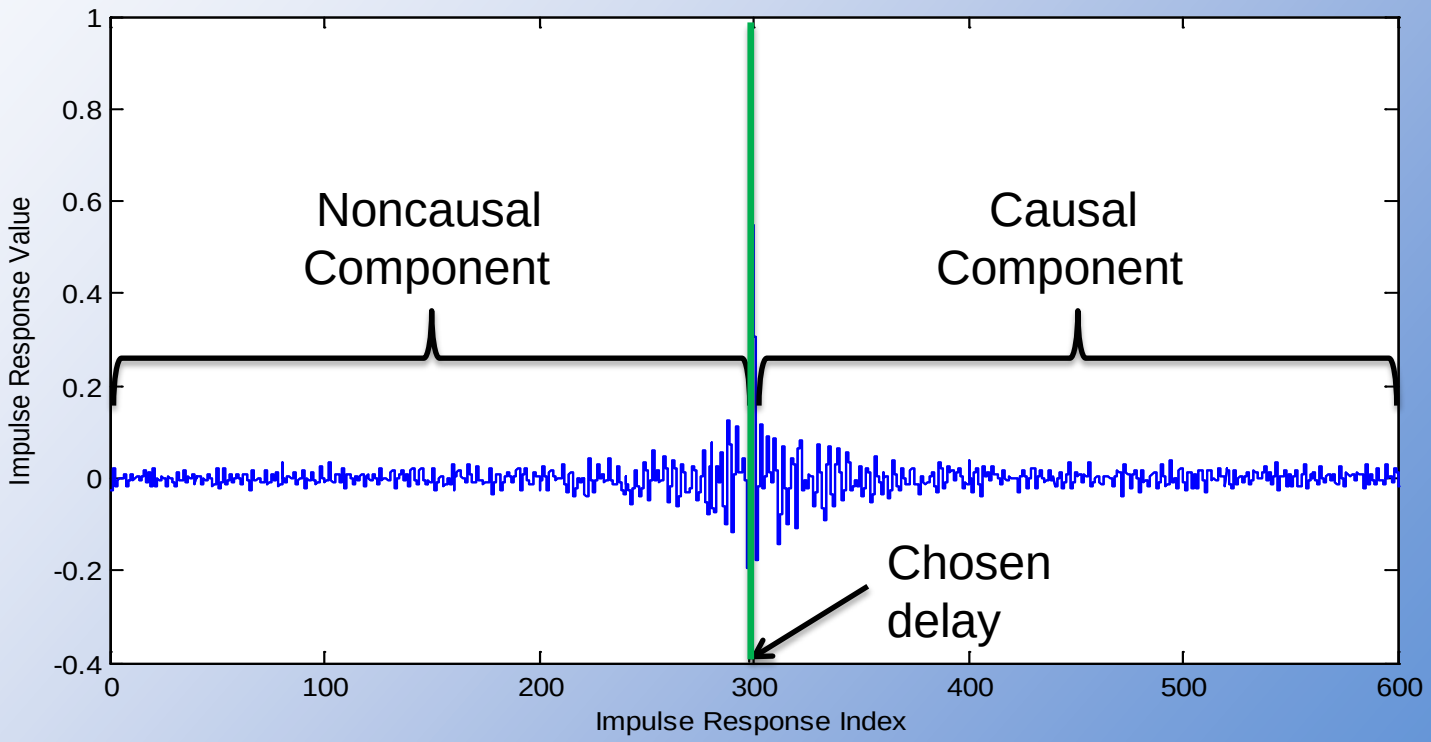

Optimal FIR Fit Based on Only Delayed Data: Compare Prediction Error for Delayed and Non-delayed Data

- Add impulse response parameters from left

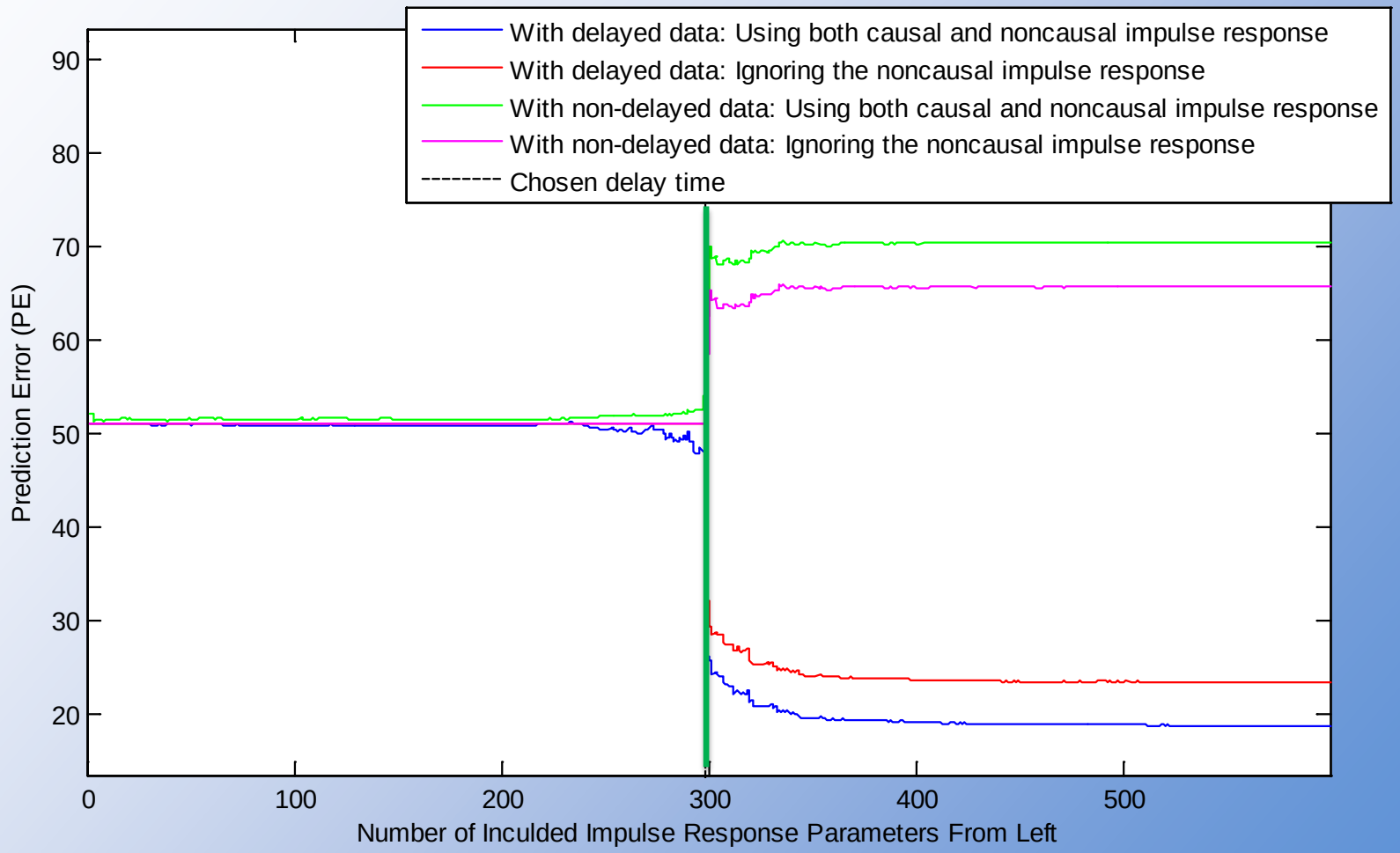

Effect of Noncausal Impulse Response on PE

- Use all causal impulse response parameters
- Add noncausal impulse response parameters from left

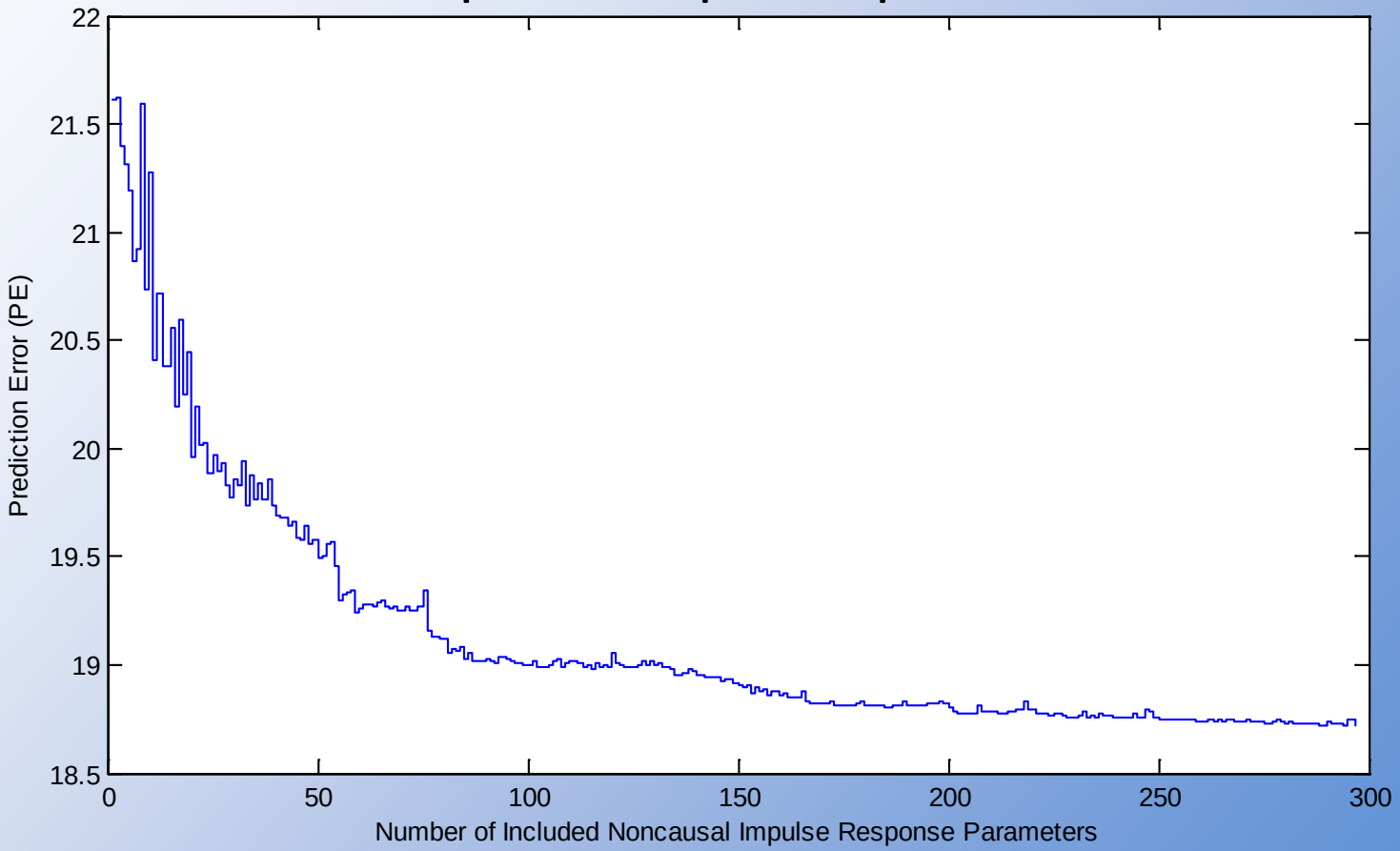

Optimal FIR Fits Using Both Delayed and Non-Delayed Data

NARI

- Add impulse response parameters from right

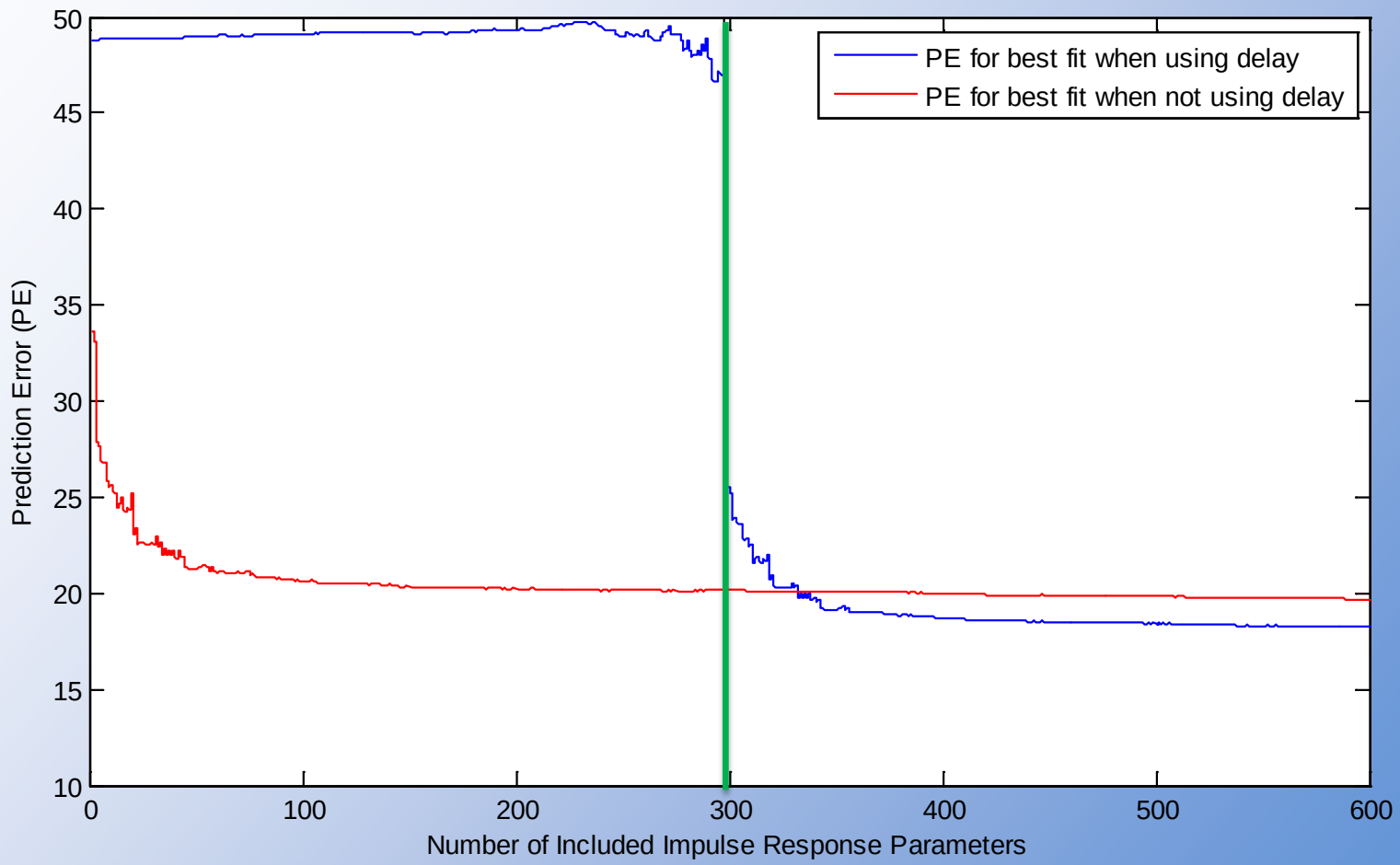

Repeatability of Estimated Impulse Response

NARI

- Divide the data set into two halves
- Identify the impulse response for each subset
- Difference in impulse responses approximates noise floor for fault-detection threshold

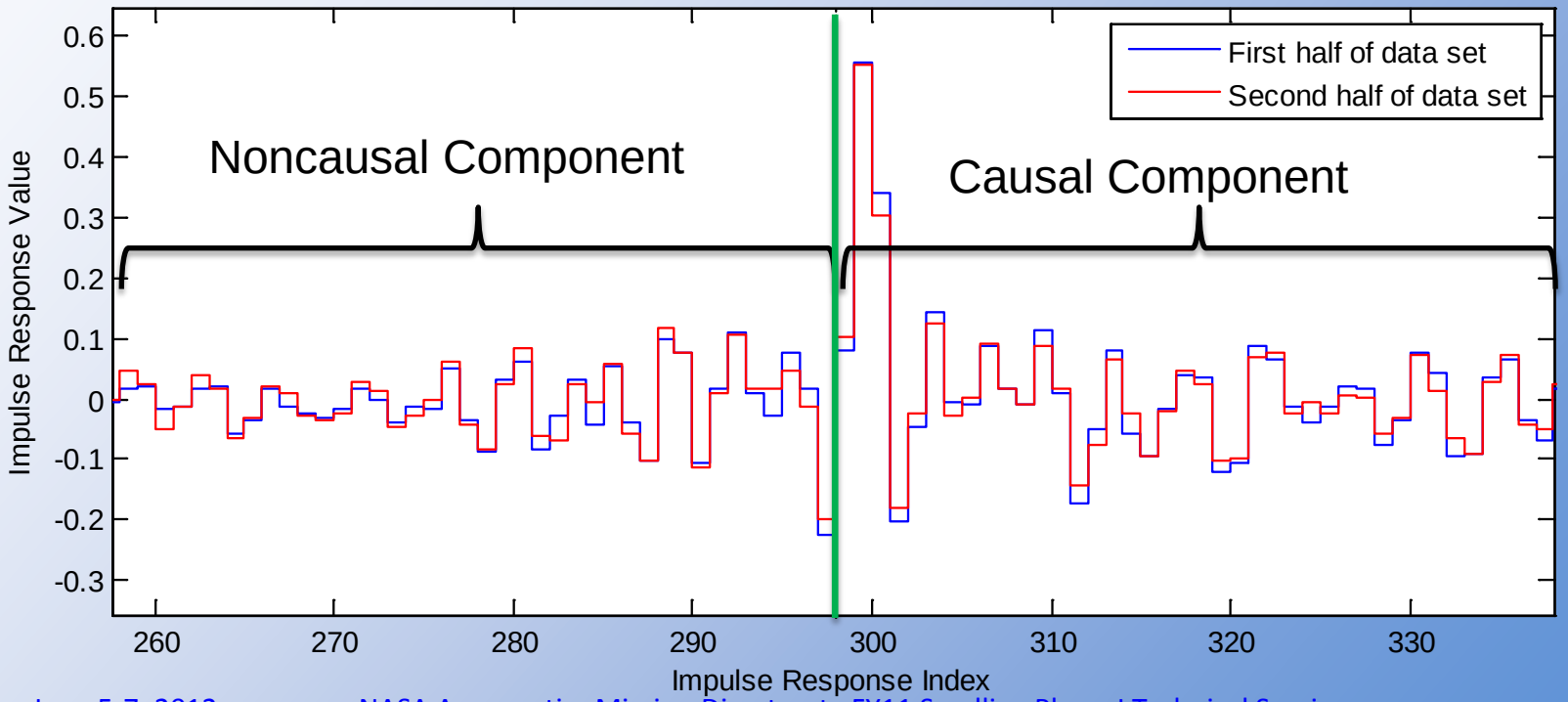

Conclusions I

- Optimal FIR approximation of unstable transfer functions with bounded data are noncausal
  - Significant new insight
- Noncausal portion of the impulse response suggests the presence of unstable SOFIA PTFs
  - Suggests presence of nonminimum-phase zeros between disturbance source and sensor locations

Conclusions II

- Estimated noncausal impulse response across data subsets is repeatable
  - Suggests that estimated PTFs may be viable for detecting structural changes
  - Can establish a noise floor for threshold specification
- Refinements in methodology can make this a viable approach to passive structural health monitoring

Phase II Future Work

- Refine fits for more accurate prediction error
  - Implement sensor noise filters
- Refine search for nonlinear effects
  - Apply nonlinear ID techniques
- Establish threshold for structural faults
  - Track PTFs over multiple flights
- Consider multi-input single output (MISO) PTFs
  - Can detect multiple excitation sources